Section 7.1

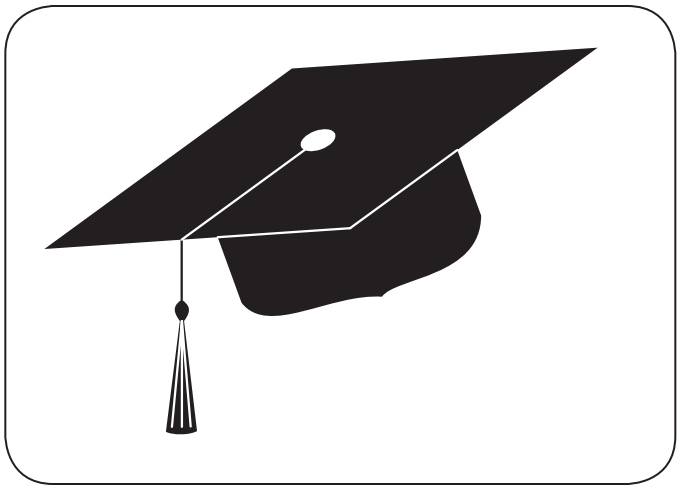

Wheel Drive Circuit - General System

Simplified Travel Circuit Diagrams:
- Neutral Controls 7.1.2
- Forward Travel 7.1.4
- Reverse Travel 7.1.5

General 7.1.3

Wheel Drive Circuit:
- General 7.1.6
- Description:
  - Mechanics 7.1.6
  - Charge Pump - Primary & Auxiliary 7.1.6
  - POR (Pressure Override) 7.1.7
  - High Pressure Relief Valves 7.1.7
  - Case Flushing Orifices 7.1.7
- Mechanics Of Operation 7.1.12

Additional Diagrams:
- Charge Circuit 7.1.8
- Wheel Drive Pump Breakdown 7.1.9
- Wheel Drive Motor Installation (Dual Motor Configuration) 7.1.10
- Wheel Drive Motor Installation (Single Motor Configuration) 7.1.11

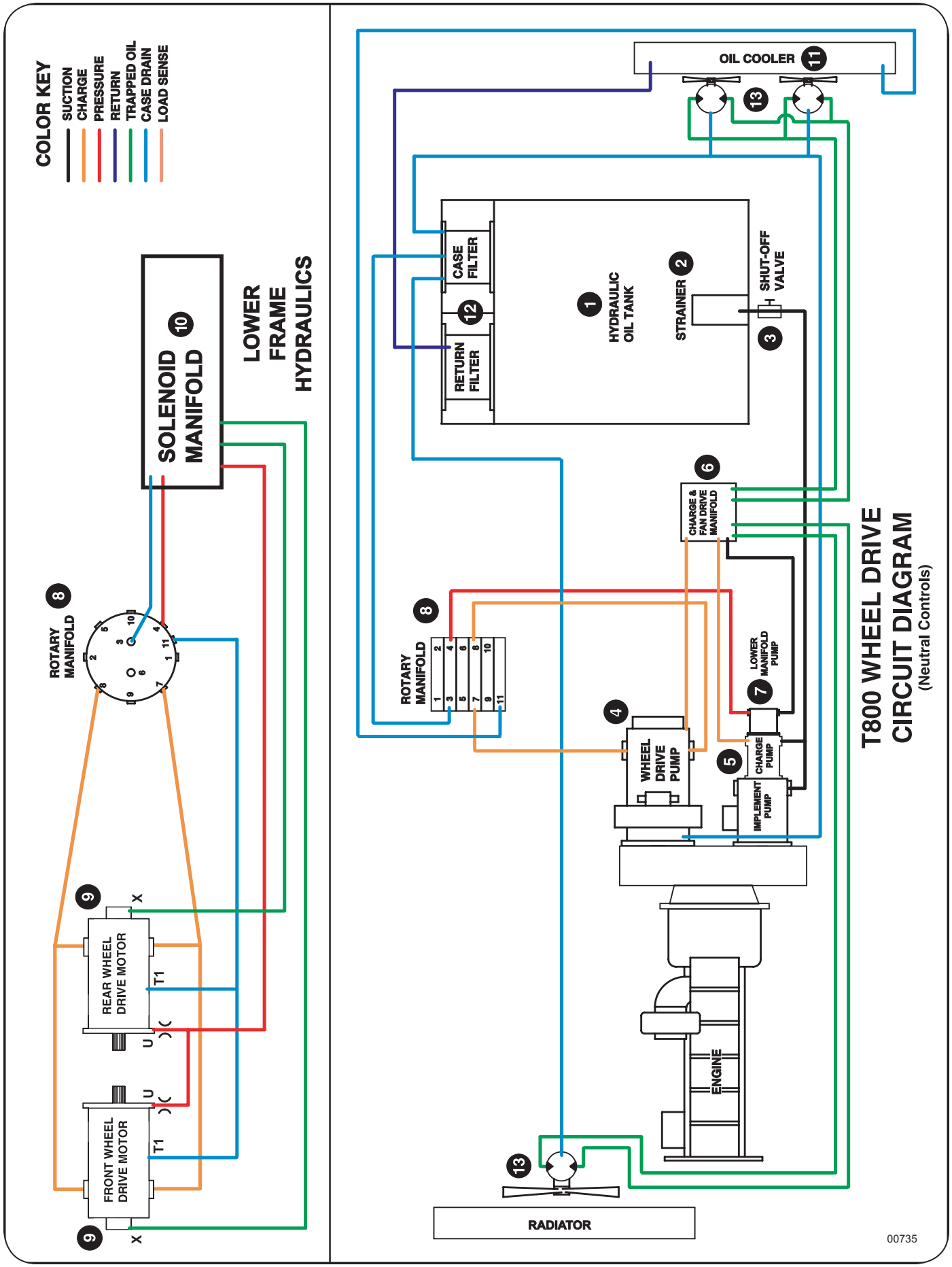

Figure 1: Simplified Travel Circuit Diagram - NEUTRAL CONTROLS (Dual Wheel Drive Motors)

General (See Figures 1, 2 & 3)

The wheel drive, or travel circuit, is a closed loop hydrostatic system made up of the following main components:

1) 60 gal. (227 liter) hydraulic oil tank for storage and cooling of the hydraulic oil. See Section 3.2 in this manual for important information on the hydraulic tank and its components.

2) 100-mesh implement suction strainer w/ magnetic stem.

3) Suction line shut-off valve.

4) Rexroth AA4VG125/3.2 series variable displacement, over-center, axial piston wheel drive pump.

5) Charge pump piggy-back mounted to the Implement pump. The charge pump is a 52cc pump. Charge pressure is controlled by the charge pressure manifold/filter assembly (Ref #6). The purpose of the charge pump is to provide make-up oil for the closed loop hydrostatic travel circuit. Flushing orifices in the pump and motors (and natural internal leakage) allow a small amount of oil to bleed from the hydrostatic loop. This leakage is replenished by the charge pump. A filter in the charge pressure manifold/filter assembly (Ref #6) cleans the charge oil before it enters the hydrostatic loop.

6) The charge pressure manifold/filter assembly contains the charge pressure relief and the charge oil filter. A sequence cartridge is used because the downstream pressure does not effect the valve pressure setting. Any increase of pressure downstream will not be additive to the charge pressure. This makes the charge pressure setting more constant. Charge pressure also provides stroke control for the wheel drive pump, swing brake release pressure, and controls the hydraulic cooler and radiator fans.

7) Lower Manifold Supply pump piggy-back mounted to the Charge pump. The Lower Manifold Supply pump is a 10cc pump and supplies oil that is used in the lower manifold.

8) 14-port rotary manifold for 360° continuous rotation swing. In the wheel drive circuit it provides the hydrostatic link to the wheel drive motors, brake connections to the axles, and shift connections to the transfer case.

9) Rexroth AA6VM160 variable displacement wheel drive motor(s). Standard configuration for a TF 830 is dual motors matched to a 2-speed gearbox. A single motor installation matched to a 2-speed gearbox is standard for a TB 630.

   The speed and drawbar pull of the machine is varied by automatically changing the displacement of the wheel drive motor(s) according to system pressure.

   The Motors can manually be controlled by using the “motor shift switch” (figure #8) located on the right handcontrol panel.

   In high range (fast speed - less drawbar) the motor(s) are at minimum displacement.

   In medium range or “Down Hill setting” (TF 830 only) the machine will lock one motor into Max displacement and leave one in Min displacement. This will stop the machine from being able to “Over-Speed” when traveling down hills or steep terrain.

   In low range (low speed - high drawbar) the motor(s) are at maximum displacement.

10) Lower Manifold is used to operate things like the brakes, gear box, motor shift, differential lock, frame lock and is also used to flush hot oil from the wheel drive motors.

11) High capacity oil cooler with a 120°-140°F (49°-60°C) thermal bypass and 50 psi (3,45 kPa) back pressure bypass.

12) Return and case drain filters in the hydraulic tank. See Section 2.2 in this manual for important information on the hydraulic tank and its components.

13) Fixed displacement, bi-directional, gear motors that turn the cooling fans for the engine radiator and hydraulic oil cooler.

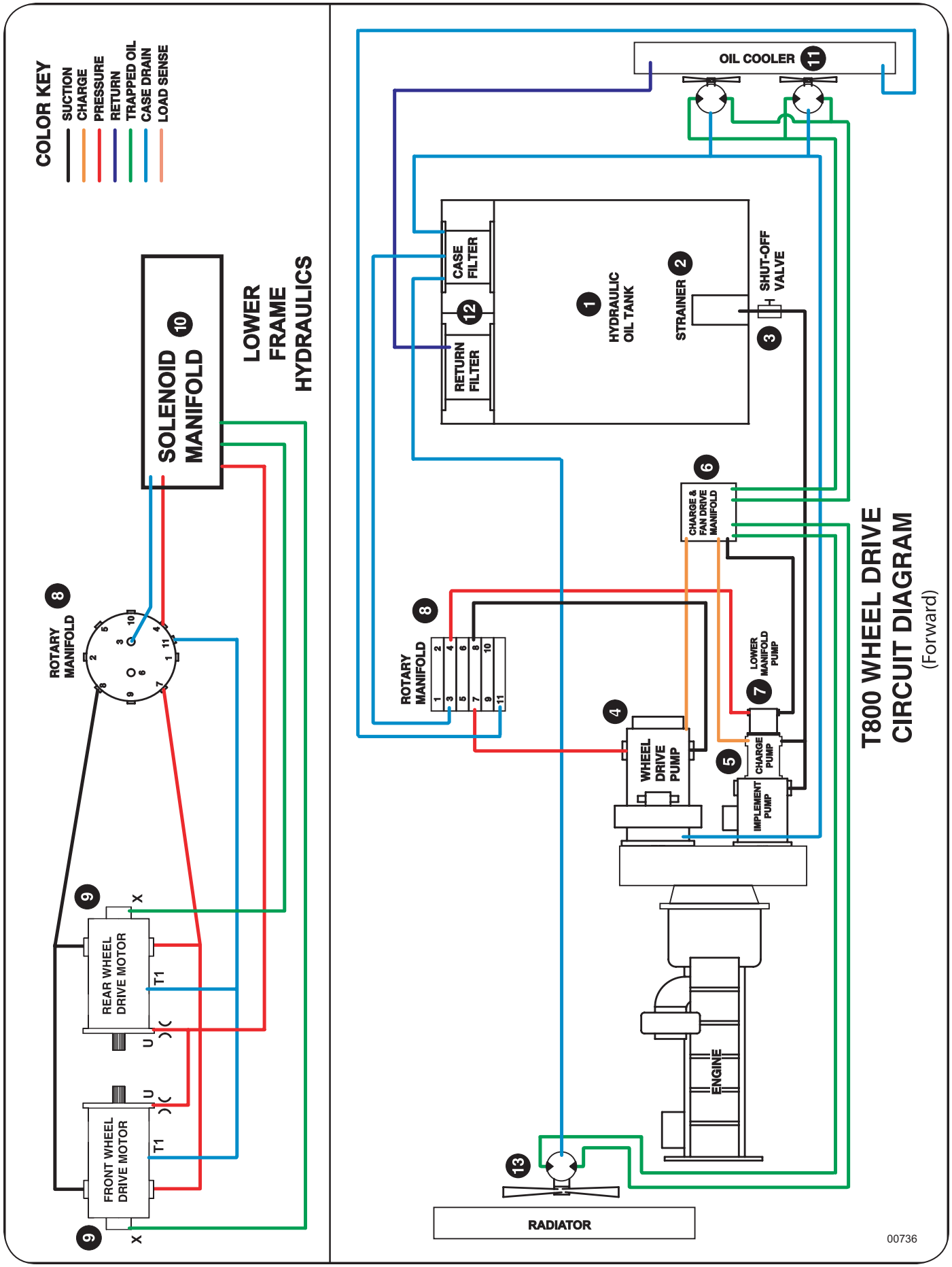

Figure 2: Simplified Travel Circuit Diagram - FORWARD TRAVEL (Dual Wheel Drive Motors)

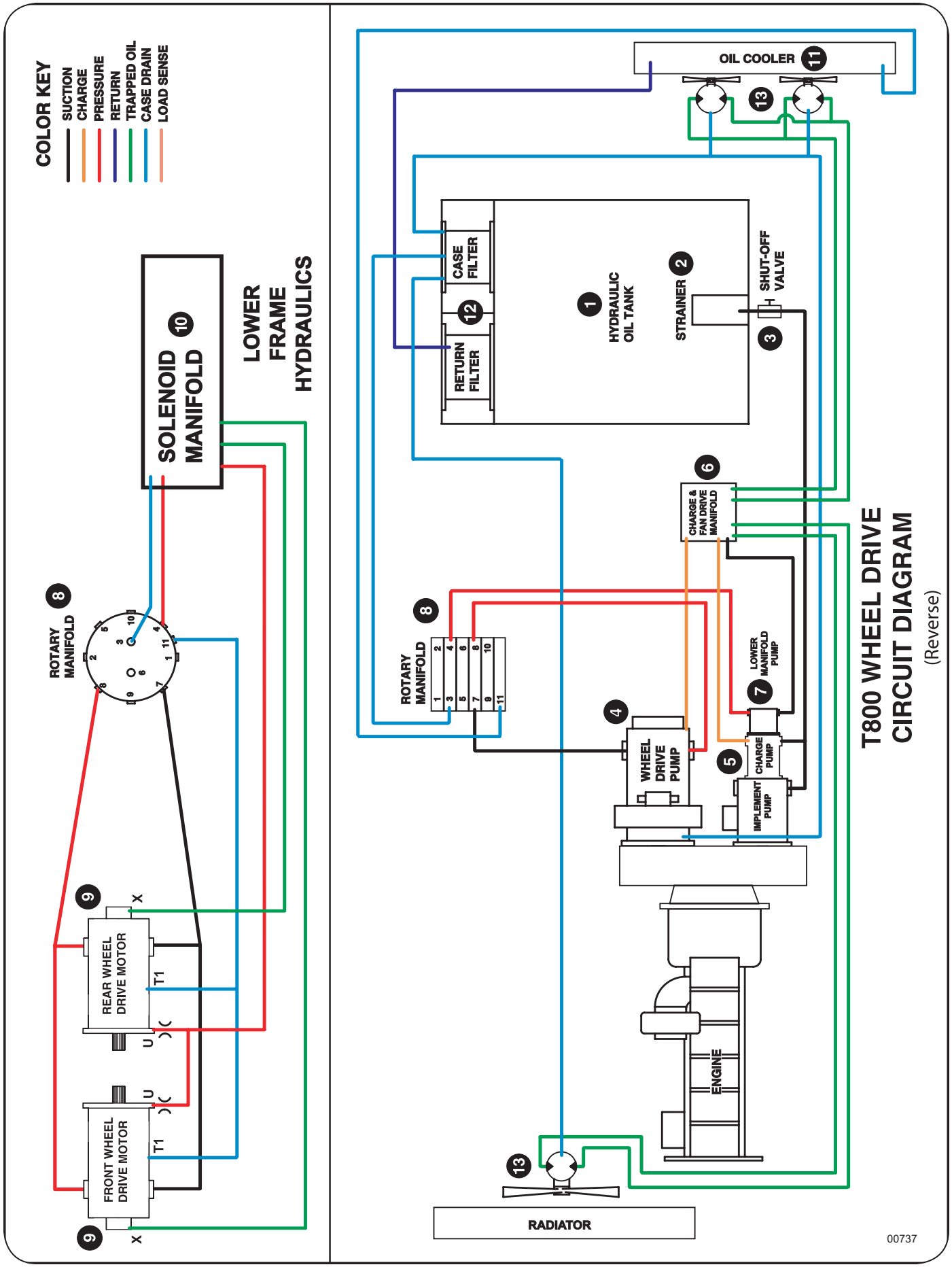

Figure 3: Simplified Travel Circuit Diagram - REVERSE TRAVEL (Dual Wheel Drive Motors)

Wheel Drive Circuit

General

The TF 830/840 machine uses a dedicated pump and a 2-speed gearbox powered by dual hydraulic motors for the wheel drive (travel) circuit. The TB 630 configuration uses a 2-speed gearbox and a single motor.

The circuit type is a closed loop hydrostatic system. The directional changes in machine movement are controlled by swiveling the pump rotating group from a centered, neutral position to either forward or reverse. This is controlled by an electrical signal sent from a travel pedal actuated by the operator.

Description

A Rexroth 125cc AA4VG3.2 series pump is used on all configurations. This pump are referred to as a over-center pump. This means that the rotary group, which provides oil flow around the hydrostatic loop, can travel over-center on either side of the neutral swash plate position. This allows oil flow to be reversed in the hydrostatic loop. The direction of machine travel is controlled by the angle of the pump swash plate to either side of neutral.

The 125cc wheel drive pump is driven through a gearbox with a speed increaser. Doing so allows the top engine RPM to be reduced to 1600 (which is the peak torque level of the Cummins QSC8.3 engine). This is being done to reduce the fuel required and reduce the noise level in the cab.

One or two Rexroth AA6VE series variable displacement motors which are mated to a 2-speed gearbox. The motors are set for different displacements to optimize the performance of the machine. These motors also utilize a 3-speed auto-shift mechanism as well as having case flushing orifices installed.

Mechanics

When the operator activates the travel pedal for the forward direction, an electrical signal is sent to the pump controller via the IQAN digital control system.

The electrical signal activates the solenoid on the pump controller, which in turn moves a small control spool that allows command oil to the pump servo. The pump servo is connected directly to the swash plate in the pump and when it is shifted, strokes up the pump in the desired direction and forces the pump to produce flow to the motors via the rotary manifold. When changing directions, the swash plate goes to the opposite side of neutral to change the direction of oil flow.

The oil returning from the motors is then routed through the rotary manifold to the opposite work port on the pump. This oil is then reused by the pump and sent back down to the motors.

Charge Pump

Because of the cooling requirements of the wheel drive circuit, it is necessary to push oil through flushing circuits to keep the pump and motors cool. The charge pump provide the make-up oil for cooling the closed loop hydrostatic pump/motors and to provide pump control pressure. The pump and motors have a natural manufacturing leakage which cannot be eliminated. This leakage must be made up or the closed loop system would run dry of oil. The charge system continually feeds oil into the low pressure side of the closed hydrostatic loop.

The maximum pressure setting of the charge circuit is regulated by a charge sequence valve located on the hydraulic tank support. Charge pressure is set at 400-425 PSI (27.6-29 bar) at 1500 RPM with a screw-type adjustment cartridge. Charge pressure also is used to release the swing brake, supply the pilot pressure manifold, and as make-up oil for the implement valve to prevent cavitation.

POR (Pressure Override)

The pressure override valve is unique in that it can limit the maximum allowed pump pressure without putting high pressure oil over a relief. See Figure 5.

When the machine encounters a condition where the drive pressure starts to exceed the maximum setting, the POR valve senses this. The POR valve then dumps the command oil that controls the pump servo to case. This allows the swash plate to move back towards the neutral position and reduce the pump flow to an amount that is enough to maintain the maximum allowed pressure.

The POR valve is adjustable and is set at 6000 PSI (413.7 bar) at 1500 RPM. See Section 7.2 in this manual for adjustment procedures.

High Pressure Relief Valves

The high pressure reliefs perform two important functions:

1) Prevent system or machine damage by venting oil from the hydrostatic loop should the machine stall against an immovable object. In this situation, a pressure spike is created in the circuit which could damage components. The high pressure reliefs sense this pressure spike and, if it exceeds the relief setting, vents oil from the hydrostatic loop into the charge system. This allows the pressure spike to dissipate without causing damage.

   Venting oil through a high pressure relief also generates an excessive amount of heat, so it is important that they are adjusted properly. The high pressure reliefs are like a safety relief and are seldom active in a properly designed and adjusted circuit.

   The high pressure reliefs are adjustable and are set at 6400 PSI (441 bar) at 1500 RPM. See Section 7.2 in this manual for adjustment procedures.

2) A high pressure relief, when located on the low pressure side of the hydrostatic loop, also acts as a check valve to allow charge oil to replenish the hydrostatic loop oil volume. This is required because of internal leakage in the pump and motors. If the leakage oil is not replaced, the hydrostatic loop would run low on oil and component damage would occur.

Case Flushing Orifices

Both the pump and motors are equipped with case flushing orifices. The purpose of these orifices is to help keep the hydrostatic loop cool.

Hot oil in the hydrostatic loop is vented through the case flushing orifices into the case drains and then routed through the oil cooler. The vented loop oil is replaced by cool charge oil. This is very important, overheating would occur without the constant removal and replacement of a small amount of loop oil.

Pump Case Flushing Orifice

The pump case flushing orifice is located in the head of the pump and is part of the charge pressure spike relief. The charge spike relief protects the charge oil circuit from high pressure spikes.

Motor Case Flushing Orifice

The motor case flushing orifice is located in the control head of the motor.

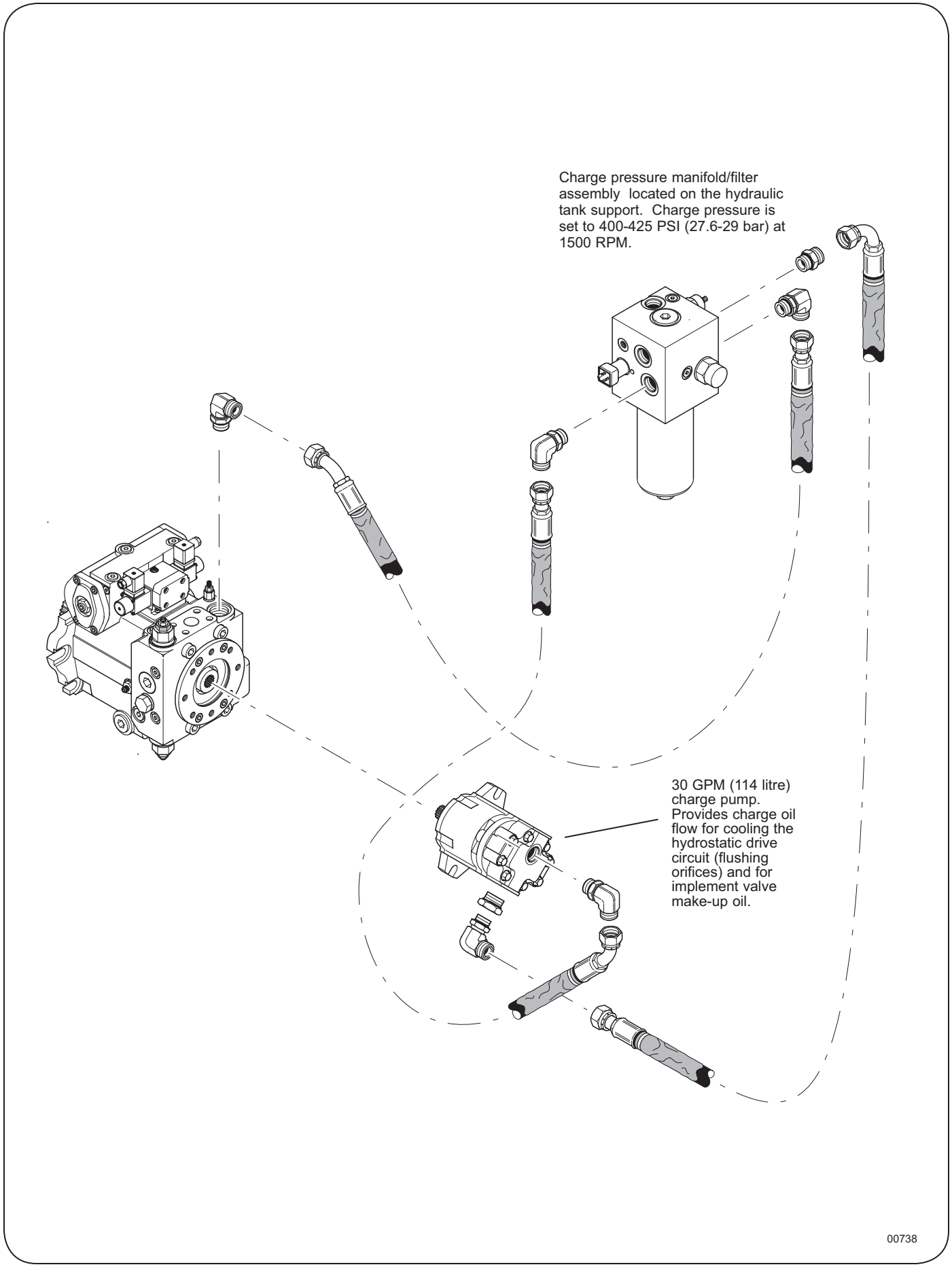

Figure 4: Charge Circuit Diagram

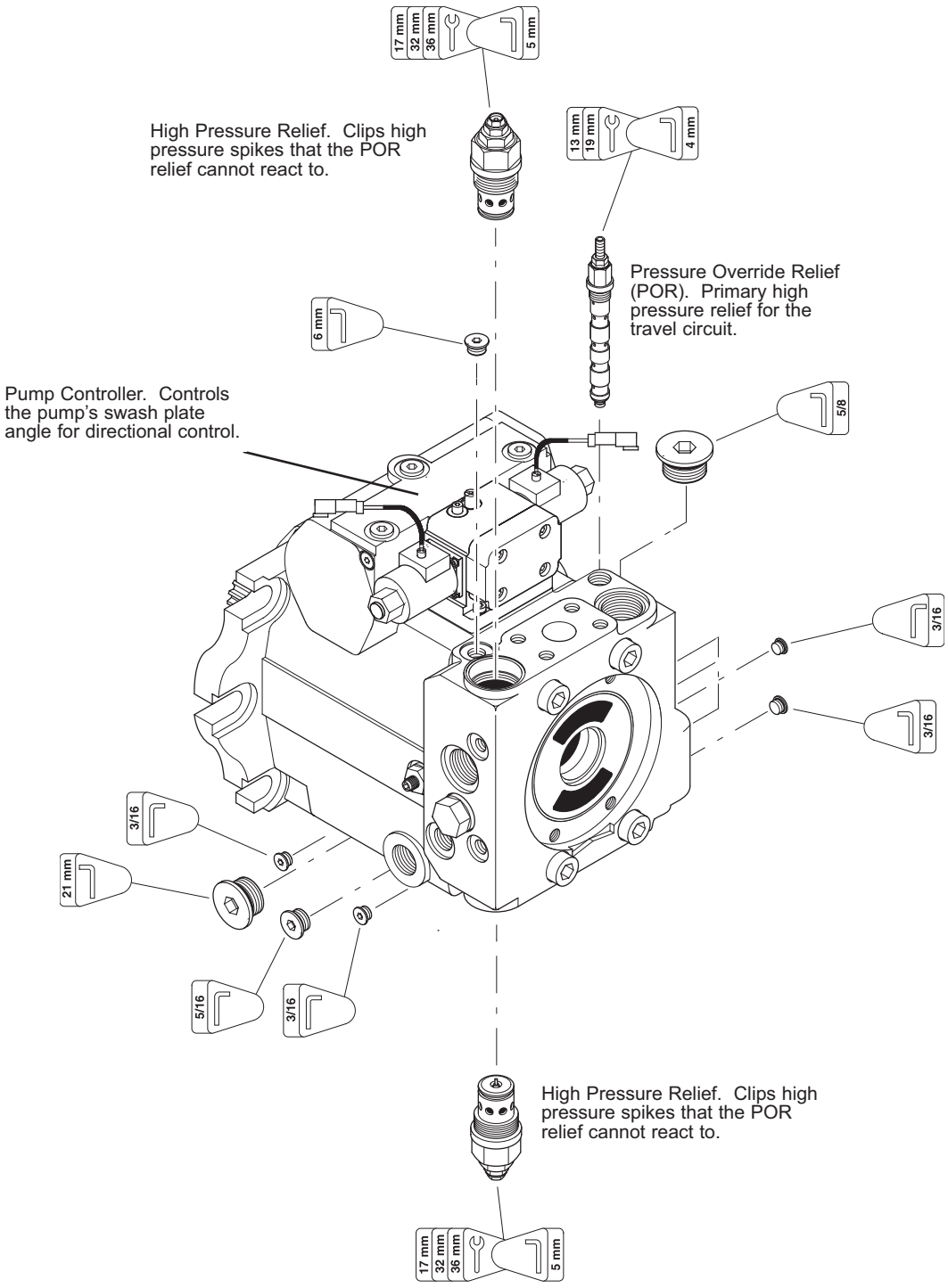

Figure 5: Wheel Drive Pump Breakdown

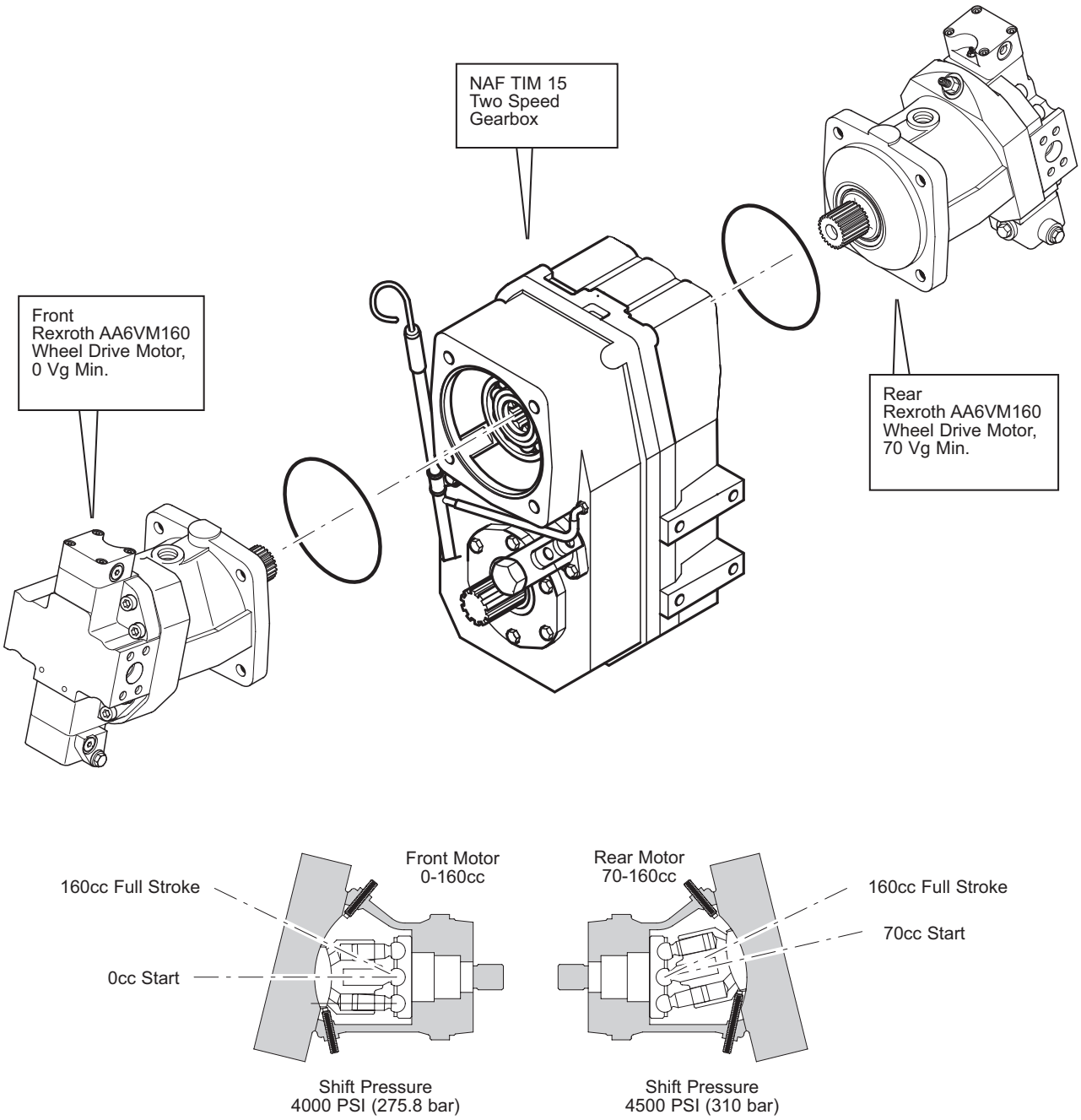

Wheel Drive Motors & Gearbox (Dual Motor Configuration)

Dual wheel drive motor configurations use dual Rexroth axial piston drive motors bolted to a NAF two speed gear reduction box. This motor/gearbox combination can be located in the front frame. The front and rear motors are different from each other in starting displacements and shift pressure settings. It is very important to replace the motor back with the same type if one should have to be replaced or removed.

IMPORTANT: The front motor S/N# tags are all stamped 0 Vg Min and the rear motors are stamped 70 Vg Min.

00599

Figure 6: Wheel Drive Motor Installation (Dual Motor Configuration)(Typical)

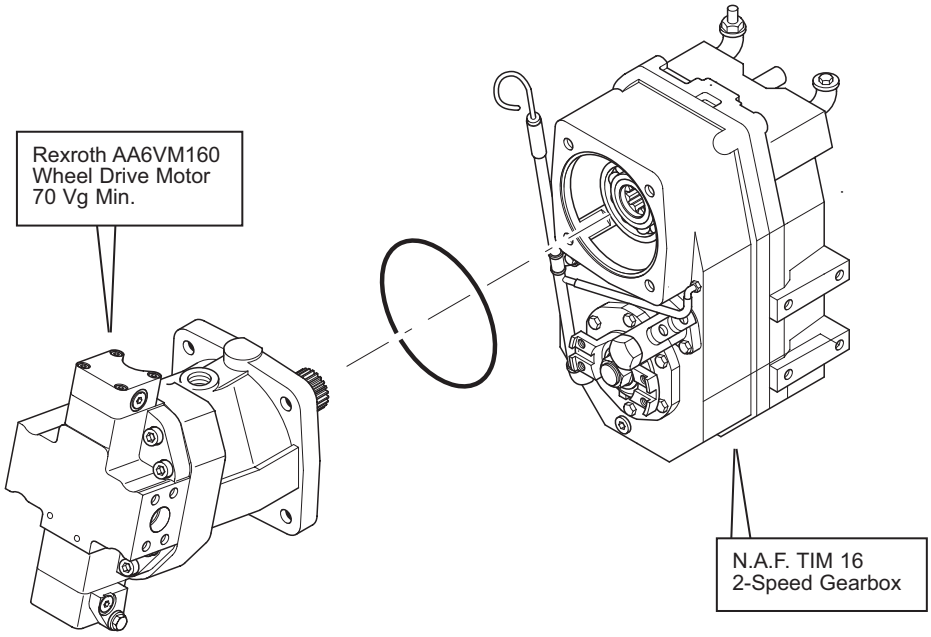

Wheel Drive Motor & Gearbox (Single Motor Configuration)

The TB 630 configurations are equipped with a single Rexroth axial piston drive motor bolted to a NAF 2-speed gear reduction box. This motor/gearbox combination is also located in the rear frame.

00608

Figure 7: Wheel Drive Motor Installation (Single Motor Configuration)(Typical)

Mechanics Of Operation

Oil flow is controlled by engine speed or RPM of the pump. The wheel drive motor(s), being driven by the pump, change displacement automatically depending on the drawbar requirements.

In a no load situation, the front motor is set at 0cc displacement and the rear motor is set at a minimum displacement of 70cc. When the machine starts to move and the pressure reaches 4000 PSI (275.8 bar) the front motor begins to shift. It will go from 0cc displacement all the way to the maximum displacement of 160cc. In this condition, when the pressure required to move the load reaches 4500 PSI (310 bar), the rear motor starts to shift off its minimum displacement of 70cc.

> With the flow produced by the 125cc wheel drive pump at 2000 RPM feeding two 160cc motors, it would take more than 260 HP to reach the pump POR setting of 6000 PSI (414 bar).

Because of the HP requirement, it is very important to back off on the foot pedal to maintain engine RPM when a tough pull is encountered. By backing off on the pedal, the displacement of the pump is reduced allowing the engine to maintain its RPM while holding pressure to keep moving the load at the sacrifice of speed. The reason it is so important to maintain engine RPM is because when the engine is slowing under heavy load there is more heat being generated and without RPM the engine fan and water pump slow down, not giving the cooling efficiencies required.

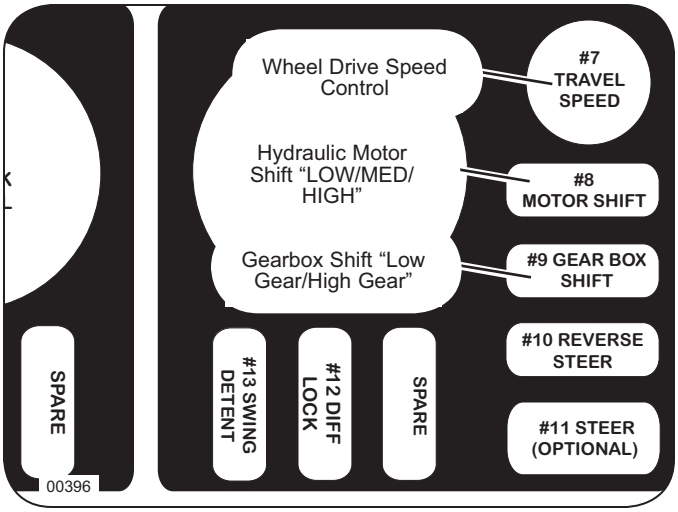

Figure 8: Right Hand Control Panel (Wheel Drive Function Switches)

When maximum drawbar is required for a tough pull, a rocker switch on the right handcontrol panel can be used to lock the wheel drive motor(s) in maximum displacement (low speed). See Figure 8.

Section 7.2

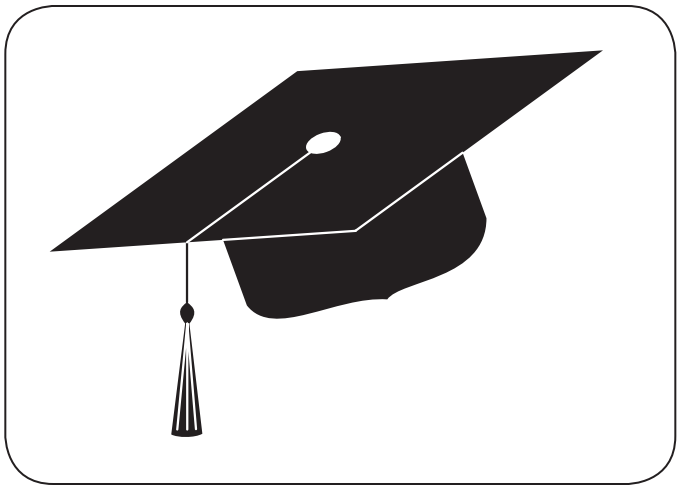

Wheel Drive Circuit - Tests & Adjustments

Safety Information 7.2.2

Tools Required 7.2.2

Wheel Drive Pump:
- Wheel Drive Charge Pressure 7.2.3
- Wheel Drive Pump Directional Relief Pressure 7.2.4
- Wheel Drive Pump POR Pressure 7.2.6
- Wheel Drive Pump Null 7.2.8
- Wheel Drive Pump Case Drain Pressure 7.2.10

Wheel Drive Motor:
- Wheel Drive Motor Begin Of Stroke 7.2.11
- Wheel Drive Motor Case Drain Pressure 7.2.14
- Wheel Drive Motor Case Drain Flow 7.2.15

Safety information

NOTICE

You must read and understand the warnings and basic safety rules, found in Group-1 of the Operation & Maintenance manual, before performing any operation, test or adjustment procedures.

Diesel exhaust fumes contain elements that are hazardous to your health. Always run engine in a well ventilated area. If in an enclosed space, vent exhaust to the outside.

At operating temperature, the engine, exhaust system components, cooling system components and hydraulic system components are HOT. Any contact can cause severe burns.

Tools Required

- Tachometer
- 0 - 60 psi (0 - 1000 kPa) pressure gauge
- 0 - 600 psi (0 - 5 Mpa) pressure gauge
- 0 - 6000 psi (0 - 50 Mpa) pressure gauge
- 0 - 10,000 psi (0 - 80 Mpa) pressure gauge
- 9/16”, 5/8”, 11/16”, 3/4”, 7/8”, 13/16”, 15/16”, 1-1/4”, & 1-3/8” wrenches
- 5/32” & 1/4” allen wrenches
- 10mm, 13mm, 17mm, 24mm wrenches
- 3mm, 4mm, 5mm, 8mm allen wrenches
- (2) PN# 15869, TIMBCO quick-couple adapter
- PN# 16031, #4 ORS plug
- PN# 16032, #8 ORS plug
- PN# 15176, #4 ORS run tee
- Gauge test hose
- (2) Gauge test hose w/#4 JICF ends
- #8 test hose w/#8 ORSF ends
- 24” (61cm) jumper hose w/#4 JICM ends
- (2) #6 ORBM - #4 JICM adapter
- #12 ORBM - #4 JICM adapter
- Calibrated container - 10 gallons (38 litres)
- Stop watch

- The operator or another mechanic may be required to operate a control while a pressure reading is being taken.

NOTE: Each machine is shipped from the factory with at least one 600 psi and one 10,000 psi gauge with quick-couple adapters. The gauges can be found in the machine Up-Time Kit.

Wheel Drive Charge Pressure

Specification:

NOTICE

DO NOT set charge pressure above 450 psig (31 bar). Overheating of the circuit and damage to the system can result.

425 psig (29.3 bar)

Test Standards:

- Hydraulics at operating temperature of 140°F (60°C) or greater.
- Engine operating at high idle (approx. 1500 RPM).

Procedure:

1. Ensure the hydraulics are at correct operating temperature.

2. Start the engine and run at low idle.

3. Connect the 600 psi pressure gauge, with the quick-couple adapter attached, to the gauge port tap provided on the centralized pressure check manifold. See Figure 1.

   NOTE: Only install a 600 psi pressure gauge after the engine is running. If the gauge is installed before the engine is started it can be damaged.

6. Increase engine throttle to high idle (approx. 1500 RPM).

7. Read the pressure gauge, the wheel drive charge pressure should be set at 425 psig (29.3 bar).

   If wheel drive charge pressure setting is correct, go to step #10. If adjustment is required, continue with step #8.

8. Open the rear engine guard and locate the wheel drive charge pressure manifold assembly. See Figure 2.

Figure 1: Wheel Drive Charge Pressure Gauge Port Tap

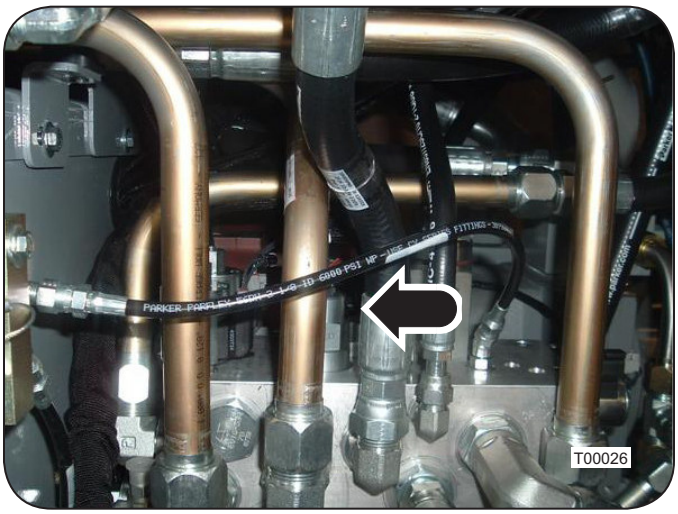

Figure 2: Wheel Drive Charge Pressure Manifold

9. Locate the large charge pressure relief cartridge. See Figure 2. Use the 9/16” wrench and 5/32” allen wrench to loosen the jam nut.

   Turning the adjustment setscrew CLOCKWISE increases the pressure setting. Turning the setscrew COUNTER-CLOCKWISE decreases the pressure setting.

10. Read the pressure gauge, re-adjust pressure setting as required. After the correct pressure setting is made, tighten the jam nut to lock adjustment setting.

11. Shut down the engine. Remove the pressure gauge and secure the rear engine guard.

Wheel Drive Pump Directional Relief Pressure

Specification:

6400 psi (441 bar)

Test Standards:

- Hydraulics at operating temperature of 140°F (60°C) or greater.
- Engine operating at high idle (approx. 1500 RPM).

Procedure:

NOTICE

Operating the wheel drives over relief produces extreme heat that can damage hydraulic system components. Make all readings and adjustments as quickly as possible.

1. Ensure the hydraulics are at correct operating temperature.

2. Locate and disconnect the parking brake solenoid coil harness at the lower solenoid manifold. See Figure 3. This will prevent the parking brake from releasing.

   NOTE: Lower solenoid manifold location varies by machine configuration.

3. Connect the 10,000 psi pressure gauge, with the quick-couple adapter attached, to the gauge port tap provided on the centralized pressure check manifold. See Figure 4.

4. Access the wheel drive pump behind the operator's cab in front of the hydraulic tank.

5. Before the directional reliefs can be set the wheel drive POR relief must be cancelled. Locate the POR relief on the wheel drive pump. See Figure 5.

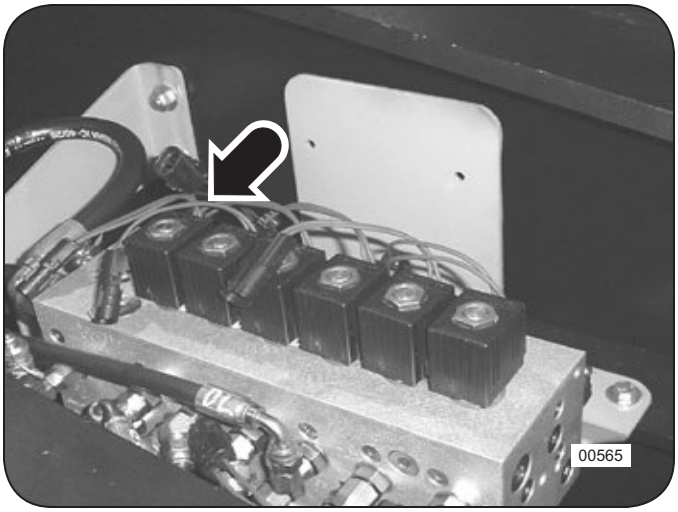

Figure 3: Lower Solenoid Manifold
(TF 830 installation shown)

Figure 4: Wheel Drive Pump Pressure Gauge Port Tap

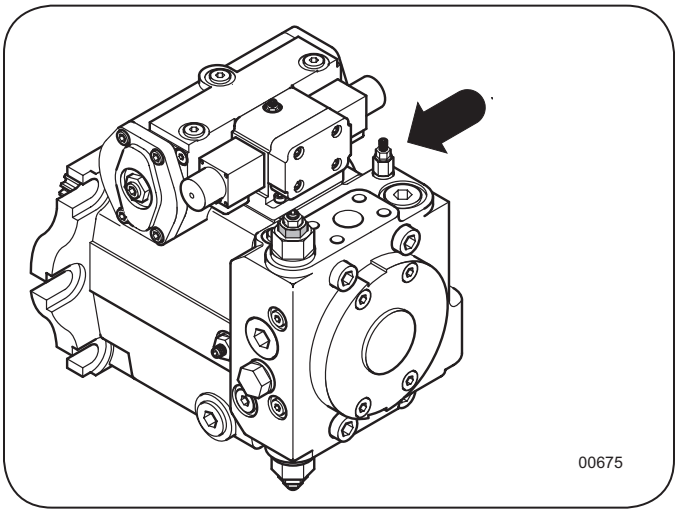

Figure 5: Wheel Drive PRO Relief

6. Use the 13mm wrench and 4mm allen wrench to loosen the jam nut on the POR relief adjustment setscrew.

7. Very carefully, turn the POR adjustment screw in CLOCKWISE until it just touches bottom then back it off 1/4 turn. This cancels the POR relief and allows the gauge to read the directional relief settings.

   NOTE: Do not turn the POR adjustment setscrew in too far or it will damage the relief valve when it bottoms out.

8. Instruct the operator or another mechanic to start the engine and run at high idle (approx. 1500 RPM).

9. On your signal, have the operator or another mechanic apply the travel brake and activate the FORWARD travel function while you take a pressure reading. Then activate the REVERSE travel function and take a reading. Wheel drive directional relief pressure should be set at 6,400 psi (441 bar) in both directions.

   If wheel drive directional relief pressure settings are correct, go to step #15. If an adjustment is required, continue with step #10.

10. Locate the directional relief for the direction of travel that requires adjustment. See Figure 6.

11. Use the 17mm wrench and 5mm allen wrench to loosen the jam nut on the directional relief adjustment setscrew.

13. On your signal, have the operator or another mechanic apply the travel brake and activate the required direction of travel while you set the directional relief to 6,400 psi (441 bar).

    Turning the adjustment setscrew CLOCKWISE increases the pressure setting. Turning the setscrew COUNTER-CLOCKWISE decreases the pressure setting.

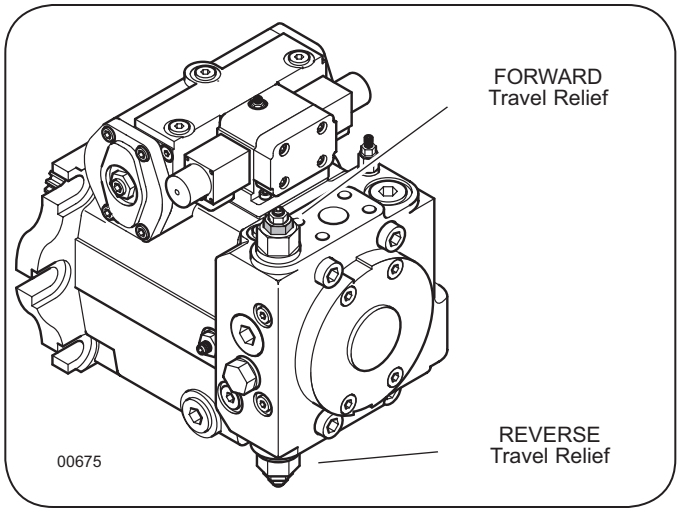

Figure 6: Wheel Drive POR Relief

14. After the correct pressure setting is made, hold the adjustment setscrew stationary and tighten the jamnut to hold the pressure setting.

15. After testing or making adjustments to the wheel drive reliefs, re-adjust the wheel drive POR pressure setting to specification.

16. Shut down the engine and remove the pressure gauge.

17. Re-connect the parking brake solenoid coil harness. Close and secure the swing-out pump guard.

18. If possible, start the engine and operate the wheel drives to help cool the circuit down.

19. Shut down the engine.

Wheel Drive Pump POR Pressure

Specification:

6000 psig (413.7 bar)

Test Standards:

- Hydraulics at operating temperature of 140°F (60°C) or greater.
- Engine at high idle (approx. 1500 RPM).
- Wheel drive pump charge pressure and charge spike relief set to specification.

Procedure:

NOTICE

Operating the wheel drives over relief produces extreme heat that can damage hydraulic system components. Expedite all pressure readings and adjustments.

1. Ensure the hydraulics are at correct operating temperature.

2. Locate and disconnect the parking brake solenoid coil harness at the lower solenoid manifold. See Figure 7. This will prevent the parking brake from releasing.

   NOTE: Lower solenoid manifold location varies by machine configuration.

3. Connect the 10,000 psi pressure gauge, with the quick-couple adapter attached, to the gauge port tap provided on the centralized pressure check manifold. See Figure 8.

4. Instruct the operator or another mechanic to start the engine and run at high idle (approx. 1500 RPM).

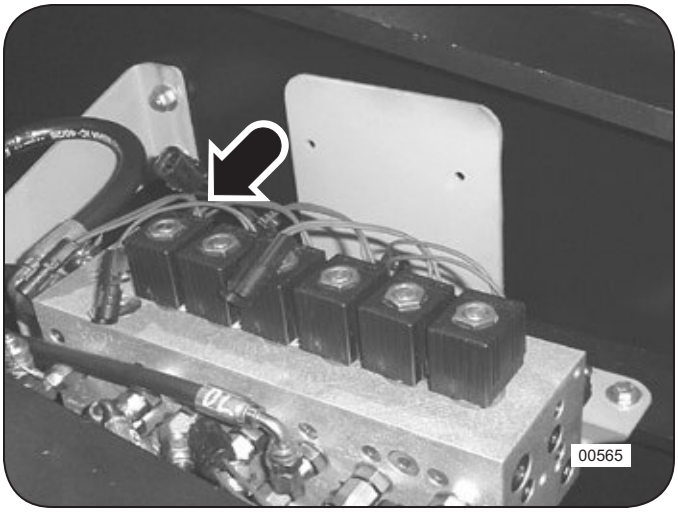

Figure 7: Lower Solenoid Manifold
(TF 830 installation shown)

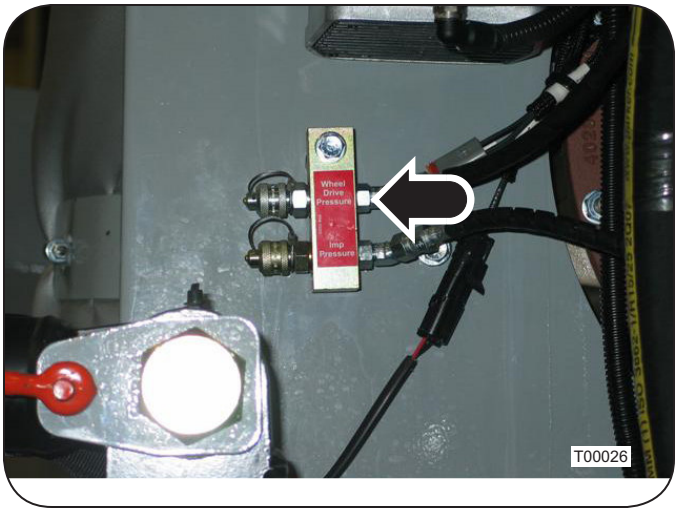

Figure 8: Wheel Drive Pump Pressure Gauge Port Tap

5. On your signal, have the operator or another mechanic apply the travel brake and activate the FORWARD travel function while you take a pressure reading. Wheel drive pump POR pressure should be set at 6000 psig (413.7 bar).

If wheel drive pump POR pressure is correct, go to step #11. If an adjustment is required, continue with step #7.

6. Locate the POR relief on the wheel drive pump. See Figure 9. Use the 13mm wrench and 4mm allen wrench to loosen the jam nut on the POR relief adjustment setscrew.

7. On your signal, have the operator or another mechanic apply the travel brake and activate the FORWARD travel function while you set the POR relief to 6000 psig (41,38 Mpa).

   Turning the adjustment setscrew CLOCKWISE increases the pressure setting. Turning the setscrew COUNTER-CLOCKWISE decreases the pressure setting.

8. After the correct pressure setting is made, hold the adjustment setscrew stationary and tighten the jamnut to hold the pressure setting.

9. Shut down the engine and remove the pressure gauge.

10. Re-connect the parking brake solenoid coil harness. Close and secure the swing-out pump guard.

11. If possible, start the engine and operate the wheel drives to help cool the circuit down.

12. Shut down the engine.

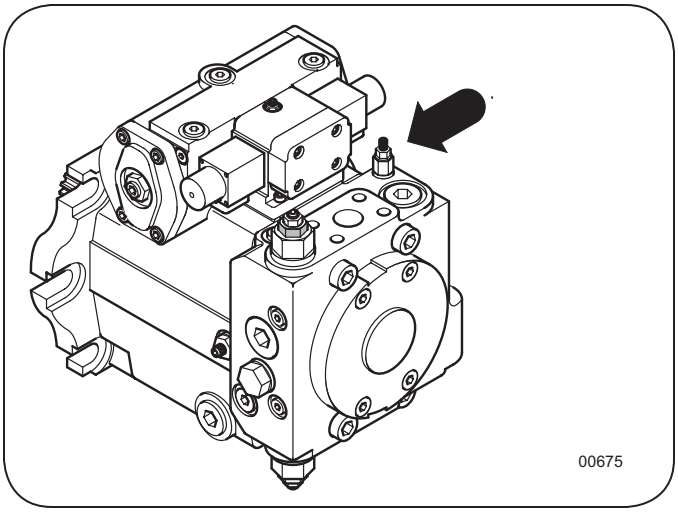

Figure 9: Wheel Drive POR Relief

Wheel Drive Pump Null

Specification:

Obtain the lowest possible pressure between ports “X1” and “X2” with the jumper hose installed.

Test Standards:

- Hydraulics at operating temperature of 140°F (60°C) or greater.
- Engine operating at idle

Procedure:

1. Ensure the hydraulics are at correct operating temperature.
2. Locate and disconnect the parking brake solenoid coil harness at the lower solenoid manifold. See Figure 10. This will prevent the parking brake from releasing.

   NOTE: Lower solenoid manifold location varies by machine configuration.
3. Access the wheel drive pump behind the swing-out guard located below the hydraulic tank.
4. Using the 3/16” allen wrench, remove the plugs from ports “X1” and “X2”. See Figure 12. Install the #6 ORBM adapters into the ports.
5. Connect the 24” (61cm) jumper hose between ports “X1” and “X2”.
6. Start the engine and run at idle. The engine will remain running throughout the procedure.
7. Connect the 10,000 psi pressure gauge, with the quick-couple adapter attached, to the gauge port tap on the wheel drive pump. See Figure 11.

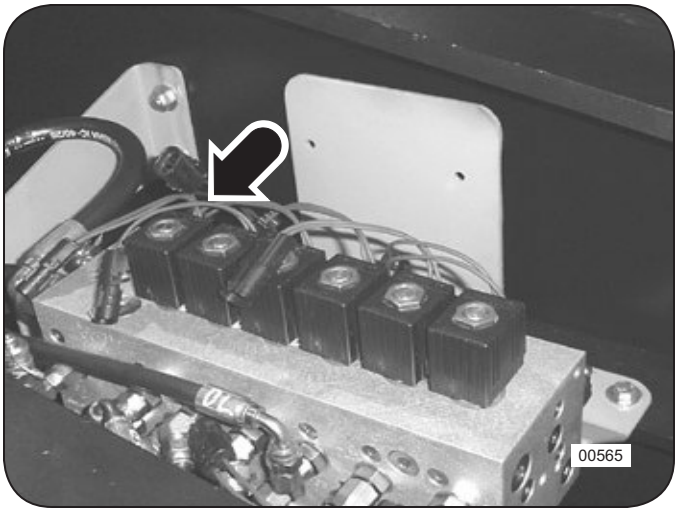

Figure 10: Lower Solenoid Manifold
(TF 830 installation shown)

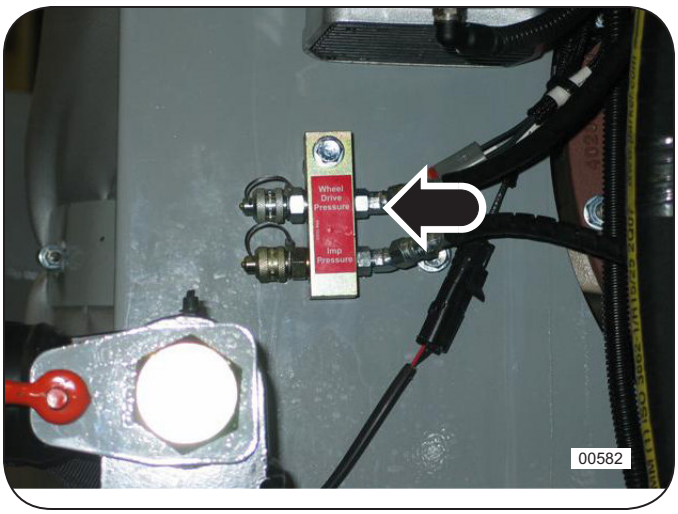

Figure 11: Wheel Drive Pump Pressure Gauge Port Tap

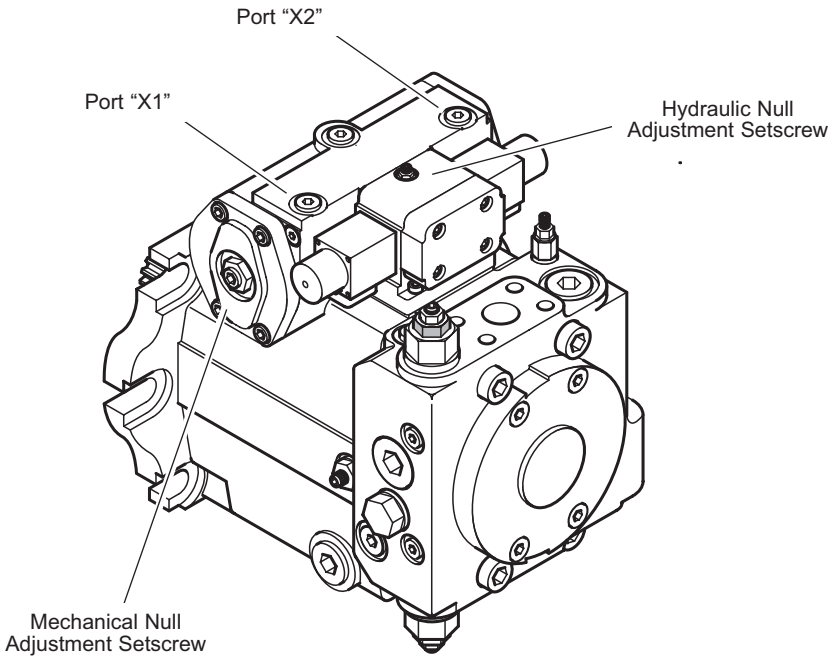

Figure 12: Hydrostatic Pump Null Adjustments

8. The mechanical null adjustment is made with a large setscrew in the control piston cover. See Figure 13. Use the 24mm wrench and 8mm allen wrench, to loosen the jamnut and turn the adjustment setscrew in and out until the gauge reads the lowest possible pressure.

   NOTE: The lowest pressure reading indicates when the control piston is in the centered null position.

9. Remove the 10,000 psi gauge and install the 600 psi gauge in its place. Repeat step #8 to make the final adjustment.

10. Remove the 600 psi gauge and install the 10,000 psi gauge in its place.

NOTICE

The hydraulic null adjustment is made with an eccentric pin and should not be turned more than 90° from center (as indicated by a notch on the adjustment screw), otherwise damage to the eccentric pin could result.

11. The hydraulic null adjustment is made with a small setscrew on top of the stroke control. See Figure 12. Use the 13 mm wrench and 4 mm allen wrench, to loosen the jam nut and turn the adjustment setscrew in and out until the gauge reads the lowest possible pressure.

    NOTE: The lowest pressure reading indicates when the control spool is in the centered null position.

12. Remove the 10,000 psi gauge and install the 600 psi gauge in its place. Repeat step #11 to make the final adjustment.

13. Shut-down engine and remove jumper hose, fittings, and gauge.

14. Re-connect the parking brake solenoid coil harness. Close and secure the rear engine guard.

15. Procedure complete.

Wheel Drive Pump Case Drain Pressure

Specification:

Maximum 30 psi (2 bar) allowed.

Test Standards:

- Hydraulics at operating temperature of 140°F (60°C) or greater with correct wheel drive and charge pressure settings.
- Engine operating at full throttle

Procedure:

1. Produce a gauge test hose that will allow you to connect a 60 psi gauge to the adapter that will be installed into the wheel drive pump case drain port.

2. Ensure the hydraulics are at correct operating temperature.

3. Locate and disconnect the parking brake solenoid coil harness at the lower solenoid manifold. See Figure 13. This will prevent the parking brake from releasing.

   NOTE: Lower solenoid manifold location varies by machine configuration.

4. Access the wheel drive pump behind the operator's cab in front of the hydraulic tank.

5. Locate and remove the wheel drive pump case drain plug in port "R". Install the #12 ORBM - #4JICM adapter into the port.

6. Install the gauge test hose and pressure gauge to the case drain port adapter.

NOTICE

Be sure the pump case is full of oil before starting the machine otherwise catastrophic damage to the pump will occur.

7. Start engine and set the hydraulic motor shift control to the "OFF" or "High" position. See Figure 14.

8. Advance engine to full throttle.

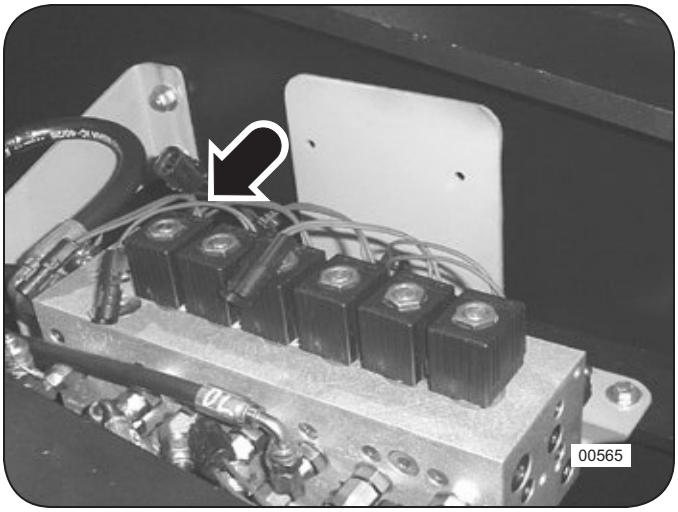

Figure 13: Lower Solenoid Manifold
(TF 830 installation shown)

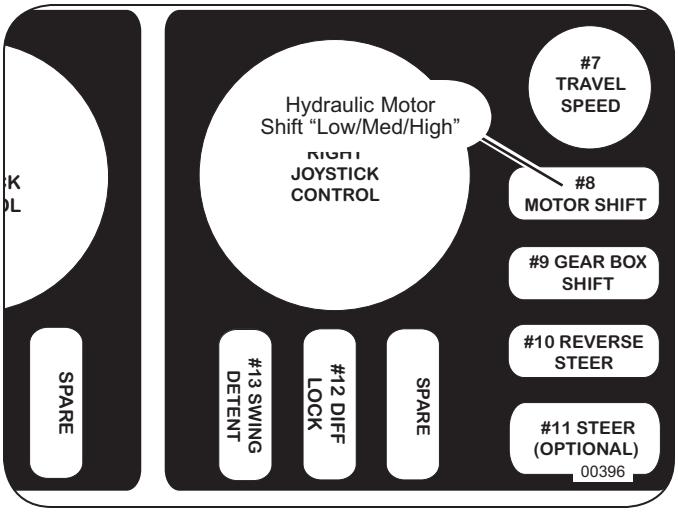

Figure 14: Hydraulic Motor Shift Control

9. On your signal, have the operator or another mechanic apply the travel brake and activate full FORWARD travel while you take a pressure reading. Then activate full REVERSE travel and take a reading.

   The wheel drive pump case drain pressure should not exceed specification. If the specification is exceeded, look for conditions that would increase backpressure in the case drain circuit such as a plugged case drain filter element, failing component, etc.

10. Shutdown the engine and re-install the wheel drive pump case port plug.

11. Re-connect the parking brake solenoid coil harness.

12. Procedure complete.

Wheel Drive Motor Begin Of Stroke

Specification:

NOTICE

In the standard configurations the front and rear wheel drive motors are different internally. There is a serial number plate attached to the underside of each motor for which identifies the motor displacement value. See Figure 16.

In dual motor applications require a 0cc motor in the front position and a 70cc motor in the rear. Single motor configurations use only the 70cc motor. Be sure to identify the motors before beginning adjustment procedures. Incorrect adjustment will overheat and possibly damage the machine.

Wheel drive pump POR relief pressure:

- 6000 psig (414 bar)

Begin of stroke pressure:

Dual Motors:
- Front Motor - 4000 psig (276 bar)
- Rear Motor - 4500 psig (310 bar)

Single Motor:
3500 psig (241 bar)

Shift pressure:

Dual Motors:
- Front Motor - 2000 psig (138 bar)
- Rear Motor - 2250 psig (155 bar)

Single Motor:
1750 psig (121 bar)

Figure 15: Motor S/N# Tag (Markings directly above the bar code identify this motor as a 70cc)

Test Standards:

- Hydraulics at operating temperature of 140°F (60°C) or greater with correct wheel drive and charge pressure settings.

- Engine at running at idle.

NOTICE

Operating the wheel drives over relief produces extreme heat that can damage hydraulic system components. Expedite all pressure readings and adjustments.

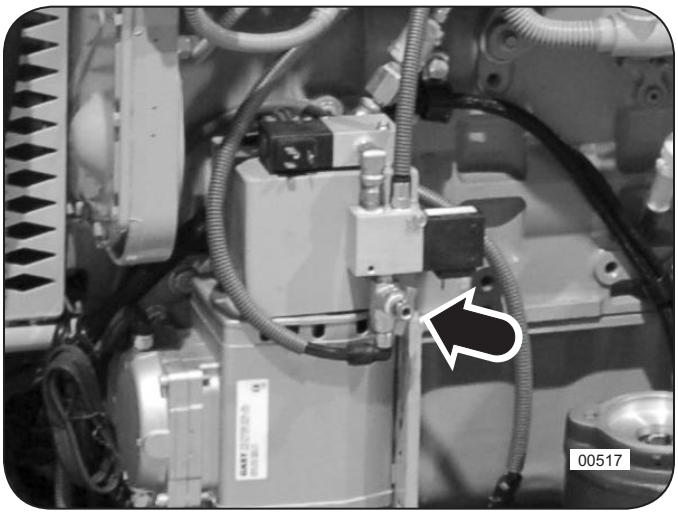

Figure 16: Turbo Boost Release Valve

Procedure:

1. Ensure the hydraulics are at correct operating temperature.

2. Release turbo boost pressure in the hydraulic tank at the turbo boost release valve. See Figure 16.

3. Locate and disconnect the parking brake solenoid coil harness (yellow wire) at the lower solenoid manifold. See Figure 18. This will prevent the parking brake from releasing.

   NOTE: Lower solenoid manifold location varies by machine configuration.

4. Access the wheel drive pump behind the operator's cab in front of the hydraulic tank.

5. Remove the guards over the wheel drive motors and gearbox in the front frame.

6. Locate port "M1" on each wheel drive motor. See Figure 18.

7. Remove the plug in port "M1" of each motor and install a #06ORBM adapter into the port. Install a gauge test hose to each adapter.

8. Disconnect the motor shift line where it enters port "X". See Figure 19. Plug the line and leave the fitting open to atmosphere.

   NOTE: Failure to leave the motor fitting open to atmosphere will result in an incorrect begin of stoke pressure readings.

9. Set the wheel drive pump POR pressure to the Begin Of Stroke Pressure value for the motor being adjusted. See "Wheel Drive POR Pressure Adjustment" in this section for procedure.

NOTE: If the begin of stroke pressure is 4000 psi then the wheel drive pump POR will be set to 4000 psi and the motor shift setting will be 2000 psi.

10. Connect the 6000 psi pressure gauge to the gauge test hose from the motor being adjusted.

    NOTE: Begin with the rear motor when performing the begin stroke adjustment on the dual motor configuration.

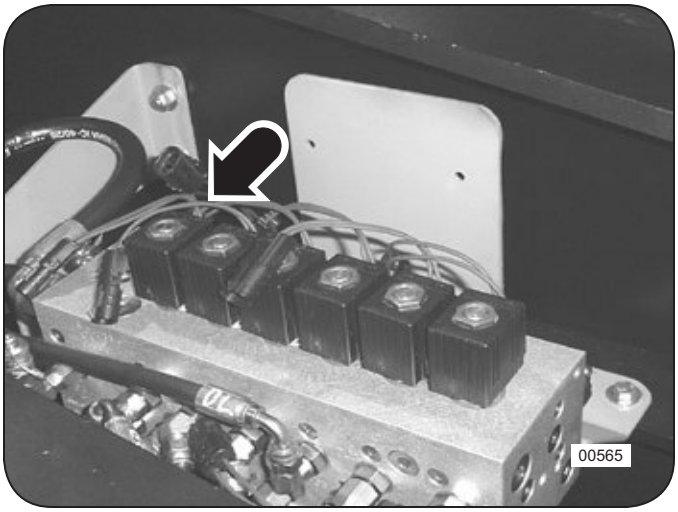

Figure 17: Lower Solenoid Manifold
(TF 830 installation shown)

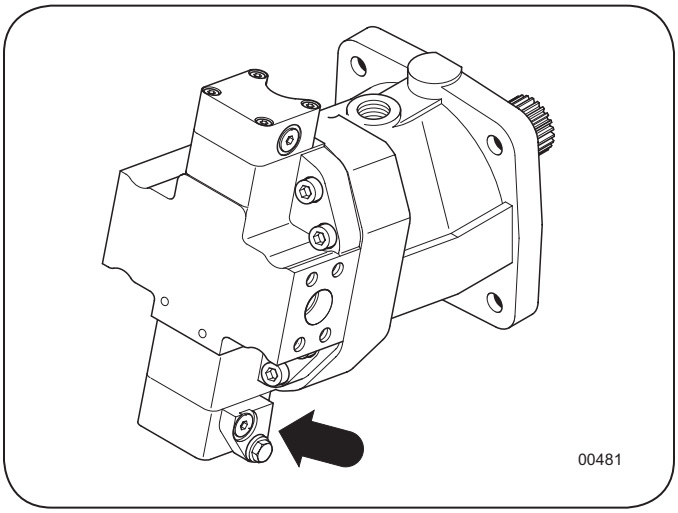

Figure 18: Wheel Drive Motor Port "M1"

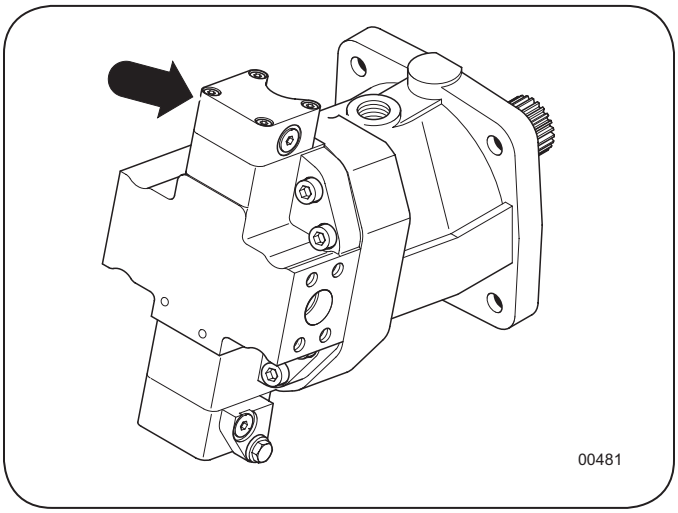

Figure 19: Wheel Drive Motor Port "X"

13. Locate the begin stroke adjustment setscrew on the motor. See Figure 20. Use the 10mm wrench and 3mm allen wrench to loosen the jamnut and back the setscrew out COUNTER-CLOCKWISE a few turns. This will allow easier setting of the motor.

    NOTE: The begin of stroke adjustment is made using the motor shift pressure at port “M1”. The motor shift pressure should be 1/2 the desired begin of stroke pressure.

14. On your signal, have the operator or another mechanic apply the travel brake and activate full FORWARD travel function while you turn the begin of stoke setscrew in CLOCKWISE until the shift pressure reaches specification.

15. Instruct the operator or another mechanic to deactivate the FORWARD travel function as soon as the adjustment is made to avoid excessive heat build-up in the wheel drive circuit.

16. After the correct pressure setting is made, hold the adjustment setscrew stationary and tighten the jamnut to hold the pressure setting.

17. If required, repeat step #12 thru #16 for the front wheel drive motor.

NOTE: Because the motor shift setting can be very sensitive to adjust, you may want to repeat adjustment a second time to insure proper adjustment.

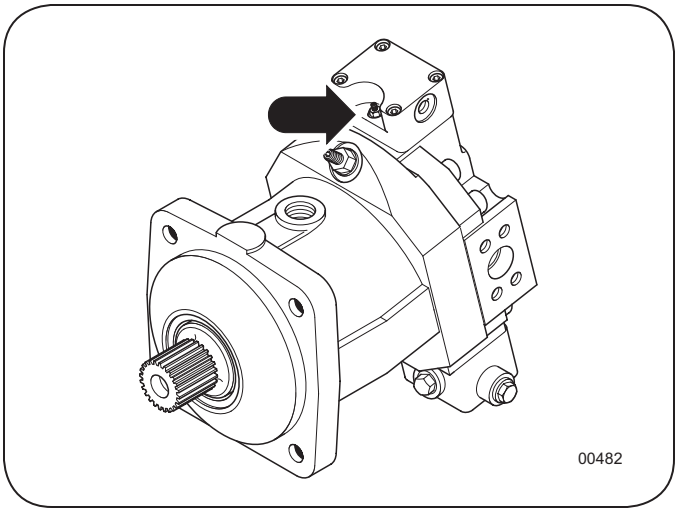

Figure 20: Wheel Drive Motor Begin Of Stoke Adjustment

18. After begin of stroke pressure have been adjusted, reset the wheel drive pump POR relief pressure to specification.

19. Shut down the engine.

20. Release turbo boost pressure at the turbo boost release valve.

21. Remove the #06ORBM adapters and gauge test hoses from the wheel drive motors. Re-install the plugs to port “M1”.

25. Re-install the guards over the wheel drive motors and transfer case.

26. Re-connect the parking brake solenoid coil harness. Close and secure the rear engine guard.

27. Procedure complete.

Wheel Drive Motor Case Drain Pressure

Specification:

Maximum 45 psig (3.1 bar) allowed.

Test Standards:

- Hydraulics at operating temperature of 140°F (60°C) or greater with correct wheel drive and charge pressure settings.
- Engine operating at full throttle.

Procedure:

1. Produce a gauge test hose that will allow you to connect a 60 psi gauge to the #4 adapter that will be installed into the wheel drive motor case drain port.
2. Ensure the hydraulics are at correct operating temperature.
3. Locate and disconnect the parking brake solenoid coil harness at the lower solenoid manifold. See Figure 21. This will prevent the parking brake from releasing.

NOTE: Lower solenoid manifold location varies by machine configuration.

4. Access the wheel drive pump behind the operator's cab in front of the hydraulic tank.
5. Remove the guards over the wheel drive motors and gearbox in front frame.
6. Locate and remove a wheel drive motor case drain plug in a port 180° from the motor's case drain line. Install the #12 ORBM adapter into the port.
7. Install the gauge test hose and pressure gauge to the case drain port adapter.

NOTICE

Be sure the pump case is full of oil before starting the machine otherwise catastrophic damage to the pump will occur.

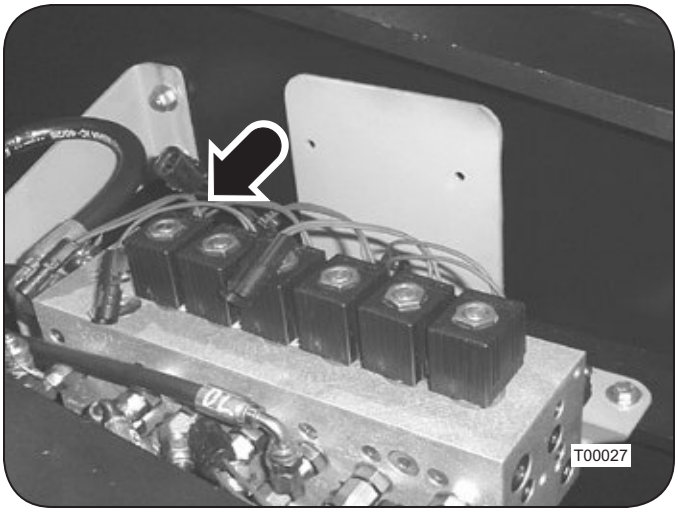

Figure 21: Lower Solenoid Manifold
(TF 830 installation shown)

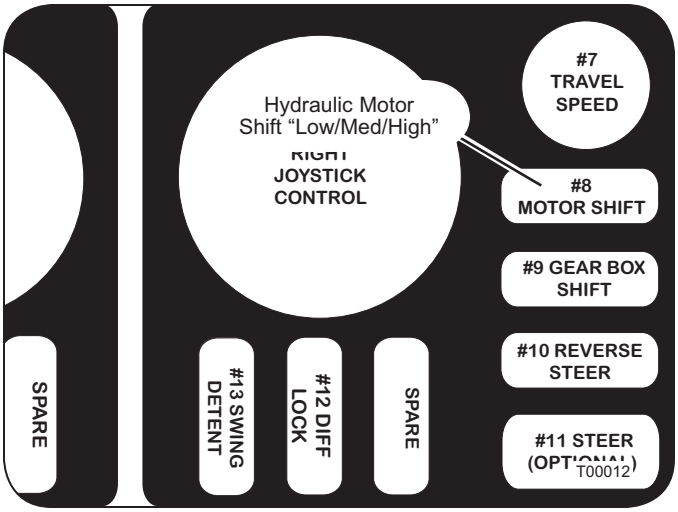

Figure 22: Hydraulic Motor Shift Control

8. Start engine and run at idle.
9. Set the hydraulic motor shift control to the "High" position. See Figure 22.
10. Advance engine to full throttle.
11. On your signal, have the operator or another mechanic apply the travel brake and activate full FORWARD travel while you take a pressure reading. Then activate full REVERSE travel and take a reading.
12. Shutdown the engine and re-connect the parking brake solenoid coil signal wire.
13. Start the engine and move the machine several feet forward.

14. Shutdown the engine and disconnect the parking brake solenoid coil signal wire.

15. Repeat step #8 thru #11 with the machine in the new position.

NOTE: The wheel drive motor case drain pressure should not exceed specification. If the specification is exceeded, look for conditions that would increase backpressure in the case drain circuit such as a plugged case drain filter element, failing component, etc.

16. Shutdown the engine and re-install the wheel drive motor case port plug.

17. Re-connect the parking brake solenoid coil harness. Close and secure the rear engine guard.

18. Procedure complete.

Wheel Drive Motor Case Drain Flow

Specification:

Maximum 8.0 gpm (30,1 litres) allowed.

Test Standards:

- Hydraulics at operating temperature of 140°F (60°C) or greater with correct wheel drive and charge pressure settings.

- Engine operating at full throttle.

Procedure:

1. Ensure the hydraulics are at correct operating temperature.

2. Locate and disconnect the parking brake solenoid coil harness at the lower solenoid manifold. See Figure 21. This will prevent the parking brake from releasing.

   NOTE: Lower solenoid manifold location varies by machine configuration.

3. Remove the guards over the wheel drive motors and gearbox in the rear frame.

4. Use the 3/4", 7/8" and 15/16" wrenches to remove the wheel drive motor case drain line at the motor. Plug the case drain hose to prevent contaminates from entering the hydraulic system.

5. Install the #08 test hose to the motor case drain fitting and place the open end of the hose into the calibrated container.

NOTICE

Be sure the pump case is full of oil before starting the machine otherwise catastrophic damage to the pump will occur.

6. Start engine and run at idle. Set the hydraulic motor shift control to the "High" position. See Figure 22.

7. Advance engine to full throttle..

8. On your signal, have the operator or another mechanic apply the travel brake and activate full FORWARD travel.

9. After one minute, deactivate the travel function and shutdown the engine.

10. Remove the wheel drive motor case drain hose from the container.

11. Measure the oil in the container. If the amount exceeds specification, the wheel drive motor is worn or failing and may have to be replaced.

12. Repeat steps #11 thru #14 for REVERSE travel.

13. Shutdown the engine and re-connect the wheel drive motor case drain hose to the motor.

14. Re-connect the parking brake solenoid coil harness. Close and secure the rear engine guard.

17. Procedure complete.

THIS PAGE LEFT BLANK FOR NOTES