Section 4.3

Machine Operation - Operating Procedures

Before Starting The Engine

NOTICE

You must read and understand the safety signs and safety information found in Section 2 of this manual before performing any operation or maintenance procedures.

General Pre-Start Inspection

Always perform a general pre-start inspection before starting the machine.

Check around and under the machine for oil or coolant leaks, worn or damaged components and loose bolts or fasteners. Clean up accumulated debris, especially in the engine, pump and exhaust areas where fires are most likely to start.

Check engine oil, hydraulic oil, coolant and fuel levels. When in cold weather conditions, make sure the engine oil and hydraulic oil are the correct viscosity, the coolant is the correct mixture and the diesel fuel is the proper grade for cold weather operation. Refer to the “Lubricant & Fill Capacities” chart in Section 3.1.

See “Daily Machine Walk-Around Inspection” in Section 3.1 for detailed daily inspection information.

⚠WARNING

Do not operate machine with malfunctioning system monitoring gauges warning alarm, or warning lights. Severe damage to the machine could result.

Engine Starting Procedure

1) Turn the ignition key to the **“RUN”** position. See Figure 1 - Item #1.

2) Check to see if the "Wait to Start" message is displayed on the MDL Screen. If the Wait light is lit, wait until it goes off before starting. See Figure 1.

NOTICE

When the engine "Wait to Start" message is on, the engine is preparing itself for startup. It is important to wait until this message is off before starting.

When temperature is below 32°F (0°C) the Wait Light message may shut off for a moment and turn back on again. At this time the internal intake grid heater is activated to aid in engine startup. Wait until the message has turned off for the second time before starting.

3) Turn the ignition key to the **“START”** position. If the engine does not to start after 15-30 seconds of cranking, return ignition key to the “OFF” position and wait before trying to start engine again to allow the starter to cool down.

4) When the engine starts, release the ignition key.

NOTICE

During extreme cold weather startup. The keyswitch can become stiff and hard to operate. Make sure the keyswitch returns fully to the run position after starting engine.

Figure 1: Upper Dash Panel

Cold Weather Starting

(Below 32°F (0°C))

When in cold weather conditions, make sure the engine oil and hydraulic oil are the correct viscosity, the coolant is the correct mixture and the diesel fuel is the proper grade for cold weather operation. Refer to the “Lubricant & Fill Capacities” Section 3.1.

The engine starting procedure is the same for cold weather conditions. The machine may also be equipped with optional equipment that make starting the machine in cold weather easier.

Additional pre-heating equipment may be required when starting the machine in cold weather conditions below 0°F (-18°C). Such equipment could include an engine block heater, Espar Pre-heater, or Engine Wet Kit. See instructions in this section on **Optional Heaters.**

Engine Shut-down

⚠WARNING

Stopping the engine immediately after it has been working under load can result in overheating and accelerated component wear. Allow engine to cool down while running at low idle before shutting down.

1. With the machine parked, run the engine at low idle for a few minutes to allow it to cool down. Stopping the engine immediately after working under load can result in overheating and accelerated component wear.

2. Turn the ignition key to the **"OFF"** position. Remove the ignition key and place in safe-keeping. See Figure 1 - Item #1.

3. If the machine is to be left unattended, such as overnight, switch off the master electrical disconnect or disconnect the positive (+) battery cable. See Figure 2.

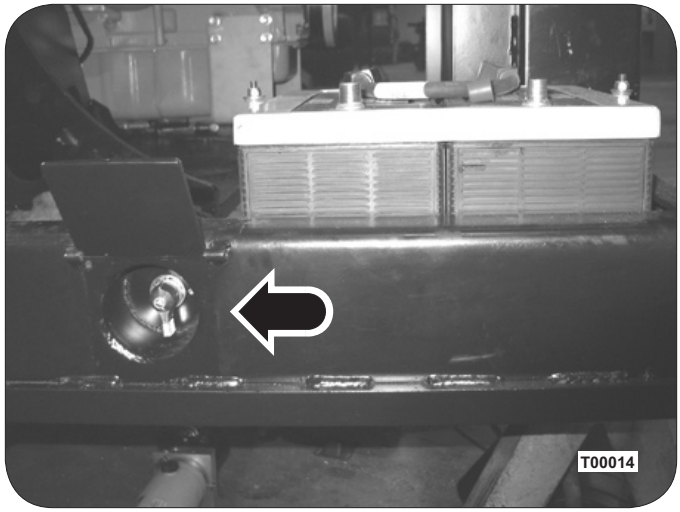

Figure 2: Master Disconnect

Engine Idling

Avoid unnecessary engine idling. Long idling periods can cause rapid wear of engine parts. Maintain 1000 rpm or more if prolonged idling is necessary.

Engine Break-in Period

A gradual engine break-in period is recommended. During the first 50 hours of operation, run the engine at moderate speeds and avoid prolong idling. Check the system MDL screen frequently. The MDL will display any engine error codes or warnings.

Machine Warm-Up Procedure

⚠WARNING

Operating the machine at full speed when engine and hydraulic oils are cold could cause serious damage to the engine or hydraulic pumps and motors.

When the outside air temperature is below 32°F (0°C). Follow these instructions to help warm and breakup the engine and hydraulic oils before trying to operate the machine at full speed.

1.) Run the engine at idle for at least 5 minutes to allow the engine to warm-up before increasing RPM or operating hydraulic functions. Always monitor all gauges and warning lights at this time.

If optional charge heater is equipped on your machine you may turn it on at this time. Always keep a close watch on machine when using charge heater. Never turn on charge heater and

leave the machine unattended. Always cycle the machine hydraulics at a low RPM after using the Charge Heater.

2.) After engine has warmed slowly operate the Grapple or Clamp function. Wait a few seconds between the open and closing for recovery. You may slowly increase the engine RPM as the hydraulic temperature begins to rise.

3.) When hydraulic oil temperature has reached 50°F (10°C) you may now run the machine at full speed.

Parking The Machine

NOTICE

When parking the machine, select a spot where the ground is level. Do not park on a hillside or any incline.

When freezing conditions are expected, do not park machine in loose or wet soil which could freeze around the wheels or in the wheel chains or tracks when installed.

1. Select a level spot to park the machine. If it is necessary to park on an incline, the wheels must be blocked securely.

NOTICE

After each day/shift's operation dirt and debris should be cleaned from the wheels and tracks when installed.

2. Reduce engine speed to low idle.

3. Lower booms and attachment and place them securely on the ground.

4. Turn Auto Parking Brake switch **"ON"**.

5. Always shut down engine before leaving machine. If machine must be left running use extra caution when parking machine. Make sure machine is parked far away from people and obstacles

Parking: Freezing Conditions

NOTICE

In freezing conditions, park the machine were it will not freeze into the ground.

DO NOT attach pulling chains around the axles if attempting to free the machine when stuck or frozen into the ground. Damage to the axles may result. Use only the towing points provided.

When parking the machine in freezing conditions, planks or forest debris can be placed under the wheels to prevent them from freezing into the ground. This is especially important when chains or tracks are installed around the wheels and the boom cannot be used to help free the machine. Also place planks or forest debris under the loader bucket or cutting attachment to prevent it from freezing into the ground.

Working in Wet And Muddy Ground Conditions

The drive shaft u-joints and carrier bearings, axle drive shaft yoke bearings, and axle articulation bearings should be lubricated daily if the machine is working in very damp conditions or the drive shaft is submerged in water or mud during operation. Greasing daily will help keep water out of these areas.

Important Towing Safety Information

⚠ WARNING

Serious personal injury or death could result when towing a disabled machine incorrectly. Contact your TimberPro dealer or the factory before beginning any towing procedure.

1. Make sure and Block the wheels to prevent movement before manually releasing the parking brakes or disconnecting the driveshafts. The machine can roll free if the wheels are not blocked.

2. Relieve the hydraulic tank and line pressure before any disassembly of hydraulic components.

3. Even after the machine has been turned off, the hydraulic oil can still be hot enough to burn. Allow the hydraulic oil time to cool before removing hydraulic hoses or components.

⚠WARNING

Tow the machine only in an emergency situation or if there has been an engine failure or a major failure that requires the machine to be moved to service facility.

If there has been a hydraulic failure of the wheel drive pump, wheel drive motor, or a mechanical failure of the transfer case, it is much better to replace the component without towing the machine. Towing a machine with a failed wheel drive pump or motor will likely contaminate other major hydraulic components in the hydrostatic wheel drive circuit while towing.

Only tow a disabled machine a short distance and no faster than 1.2 mph (1,9 km/h). Always haul the machine if long distance moving is required.

4. Shielding of the tow bar or cable must be provided on the towing machine to protect the operator if the tow line or bar should break.

5. Before towing, be sure the tow line or bar is in good condition and has enough strength for the towing situation involved. Use a towing line or bar with a capacity at least 1.5 times the gross weight of the towing machine, for a disabled machine stuck in mud or when towing on a grade.

DO NOT use a chain for pulling. A chain link can break causing possible personal injury. Use a wire rope cable with loop or ring ends. Use an observer in a safe position to stop the pulling procedure if the cable starts to break or unravel. Stop pulling whenever the pulling machine moves without moving the towed machine.

6. Keep the tow line angle to a minimum. DO NOT exceed a 30° angle from the straight ahead position.

7. Quick machine movement could overload the tow line or bar and cause it to break. Gradual and smooth machine movement will work better.

8. Towing machine should be as large as the disabled machine. Make sure that the towing machine has enough brake capacity, weight and power to control both machines for the grade and distance involved.

9. To provide sufficient control and braking when moving a disabled machine downhill, a larger machine or additional machines connected to the rear could be required. This will prevent the disabled machine from rolling uncontrolled.

10. Do not allow an operator on the machine being towed unless the operator can control the steering and/or braking.

Towing Machines That Are Disabled

Use the following procedure only if there has been no hydraulic failure of the wheel drive pump, wheel drive motor, or in case of an emergency.

Required Tools List

- Operator or another mechanic
- 3/4”, 7/8” & 15/16” wrenches
- 18mm & 24mm wrenches
- (4) #8 ORSF plugs, PN# 16032
- Oil absorbent clean-up rags (plenty)

Ready The Machine For Towing

1. Review all Important Towing Safety Information in the previous section before beginning the towing procedure.

2. Block all wheels to prevent movement of the machine while disengaging the parking brake and disconnecting the drive shafts.

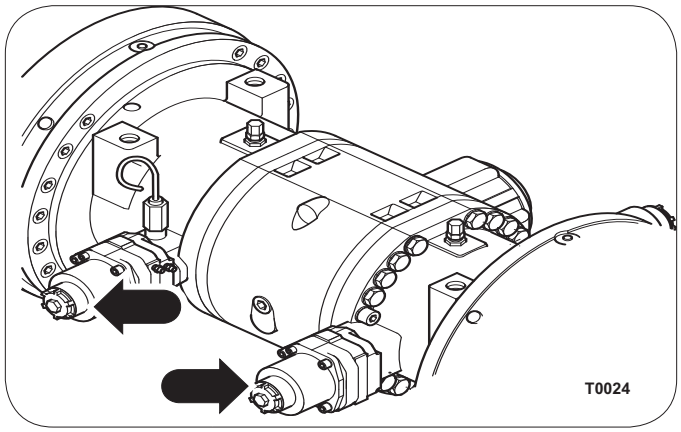

Figure 3: Tandem Axle Parking Brake Release

3. Using the 3/4” wrench, remove the bolts securing the access covers over the axle parking brake housings on tandem axles.

4. Use the 24mm wrench to access the manual parking brake releases on the tandem axles. See Figure 3. The release screws are provided behind the parking brake housing covers.

5. With the wheels blocked, use the 18mm wrench to turn the parking brake manual release screws clock-wise all the way in to release the parking brake. Do this for both the front and rear axles. See figure 4.

Figure 4: Axle Parking Brake Release

TB 630 special note: The TB 630 uses a single axle in the rear of the machine and will have bolt and lock nut to remove pressure on the parking brake disks. see figure 5. Loosen locking nut and turn bolt clockwise to release parking brake.

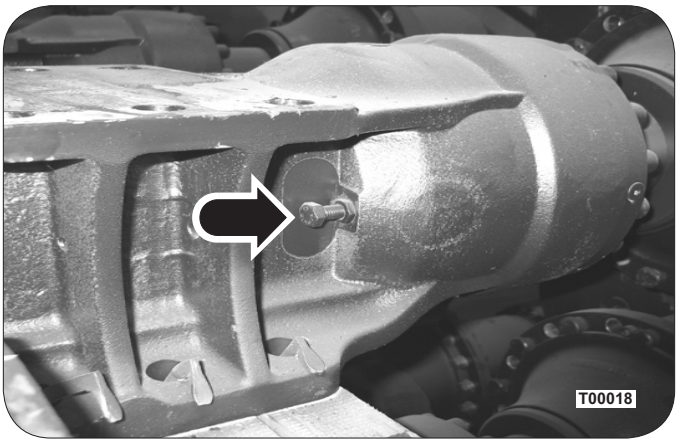

Figure 5: Single Axle Parking Brake Release

6. With the wheels blocked, Disconnect the drive shafts at the front and rear axles.

WARNING

DO NOT disconnect the drive shafts anywhere but at the axle yokes. Disconnecting the driveshaft elsewhere may damage the driveshaft when the axle rotates during towing.

9. Connect the towing line or bar. Be sure the towing machine is suitable for towing the disabled machine and has the braking power for itself and the disabled machine.

10. Remove blocking from the wheels.

11. The disabled machine is now ready to be towed.

After Towing

1. Block all wheels to prevent movement of the machine while the parking brake is being set and repairs are being made.

2. If the manual parking brake release screws were used, turn them out counter-clockwise to set the parking brake at both axles.

3. Perform necessary repairs to the machine.

After Repairs Have Been Made

1. With the wheels blocked and the parking brake set, re-connect the drive shafts at the front and rear axles.

2. Remove blocking from the wheels.

3. The machine is now ready for testing and normal service.

Optional Heaters

Wet Kit (Optional)

NOTICE

The external source of warm coolant must have the same coolant mixture as the machine's engine. Coolants containing different additives or mixture ratios may result in chemical imbalance and possible engine damage.

A warm water circulation kit (wet kit) is available to preheat the engine block before starting. The wet kit allows an external warm water source (a properly equipped service vehicle, portable propane water heater, etc.) To be circulated through the machine's cold engine for easier starting. The mating connectors required to make the connection is available from your TimberPro dealer (PN 17307F) See Figure 6.

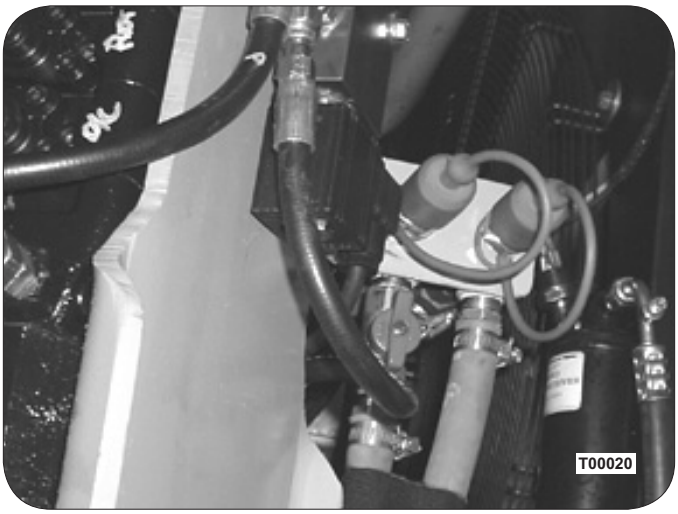

Figure 6: Engine Wet Kit

Charge Heater

A wheel drive charge oil heater block is available as an option for helping to speed-up hydraulic system warming in colder climates. The Charge Heater uses wheel drive system charge oil and forces it across a relief, warming the oil and recirculating it back to the hydraulic tank. The Charge Heater is set to shut off automatically at 70° F.

The Charge Heater control switch is located on the left joystick control pad. See Section 4.2 on machine controls.

Espar Pre-Heater Control
(Optional)

The Espar Pre-Heater is an optional diesel powered pre-heater that warms the engine coolant and the hydraulic oil.

The Espar Pre-heater contains a programmable control module that can be programed to automatically turn on the pre-heater.

NOTICE

The Espar Pre-Heater will get extremely hot. Always clean all debris and flammable fluids out from around the heater and the heaters exhaust before use. Always use extra caution when programing heater to turn on when no one is around the machine to supervise.

The following page contains instructions for operation the Espar control panel. For more information on the Espar Pre-heater's operation and safety please read the Espar heater manual shipped with your machine.

NOTICE

Always be sure and turn off the heater water valves when heater is not being used. Failure to do so will cause overheating of engine coolant and hydraulic oil.

Espar Pre-Heater Control
(Optional)

The 7 Day Timer has been designed to provide a simple means to control the operation of the heater system and to include the capability for diagnostics. This timer connects to the diagnostic circuit of the heater. The timer then displays any heater fault codes in three digit number form automatically.

The timer allows for pre-selection of turn on time, up to 7 days in advance, as well as an option for run times up to 2 hours before automatically turning off. In addition, there is an on/off switch for manual operation. By default the timer is pre-set by Espar to operate for two hours. See reverse side for programming timer.

Operating Instructions

1 Time set
2 Preheat time set
3 Heater On
4 Backward scan
5 Forward scan
6 Memory location
7 Time and day display
8 Air temperature display (optional)
9 Heater On symbol
10 Temperature set (air heater only)

Coolant Heater

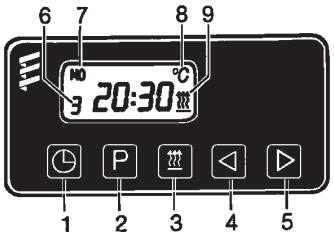

Note: Upon connection to power the entire timer display will begin to flash. The heater will not function until the time is programmed.

Setting Time and Weekday

Push button once. 12:00 will begin to flash (this will occur upon initial hook up to power).
Using or set the present time of day (24 hour clock).
When the time stops flashing the time has been stored.
The weekday will now begin to flash.
Use or to set the present weekday.
When the weekday stops flashing the weekday has been stored
.
When the vehicle ignition is turned on the time display will appear .
When the vehicle ignition is turned off the timer display will go off after 15 seconds.

Changing the Time or Day

Push and hold button until the time display begins to flash. Continue to set the time as listed in setting time and weekday.

Using the Timer with the Vehicle Ignition Off

Push button.
will appear on the display as well as the operation countdown timer. The running time is factory set to a maximum of 120 minutes. This running time can be reset once or permanently as desired.

Adjusting Preheat Time Once

Press button.
The will appear in the display and the preselected run time will appear in the display (maximum time of 120 minutes).
Use the or to adjust the desired run time.

Adjusting the Heater Preheat Time Permanently
(Maximum Preheat Time of 120 minutes)

Push and hold (about 3 seconds) until the display lights up and flashes. Release button.
Use or to set the new fixed preheat time.
When the display goes off the new preheat time is set.

Note: At the end of a preheat cycle the timer will turn the heater off. The heater will complete a cool down cycle and turn itself off.

Using the Heater Manually with the Vehicle Accessory On

Push button.
The symbol will appear in the display next to the time of day.
The time of day will remain displayed during ignition on operation.
The heater will function continually as long as the vehicle ignition is on.
When the vehicle ignition is turned off the heater will continue to operate for an addtional 15 minutes.
The run time can be altered by pressing the or buttons.
The heater can be turned off by pressing button.

Set Preheat Times into Memory

Press P button until the desired memory location is shown in the display (Three memory locations are available).
Using the or buttons set the desired preheat start time of day.
When the time stops flashing the time of day is set.
Using the or buttons set the desired day of the week.
When the day of the week stops flashing the day is set.

To Use Preset Start Times

Press the P button until the desired memory location appears in the display.
The heater will start at the day and time displayed.
The display will go off in 15 seconds. The memory location number will stay displayed (1, 2 or 3).

To Turn Heater Off - All Modes

Press the button once.
The heat signal to the heater will be turned off.
The heater will do a normal cooldown and turn itself off.

T00007