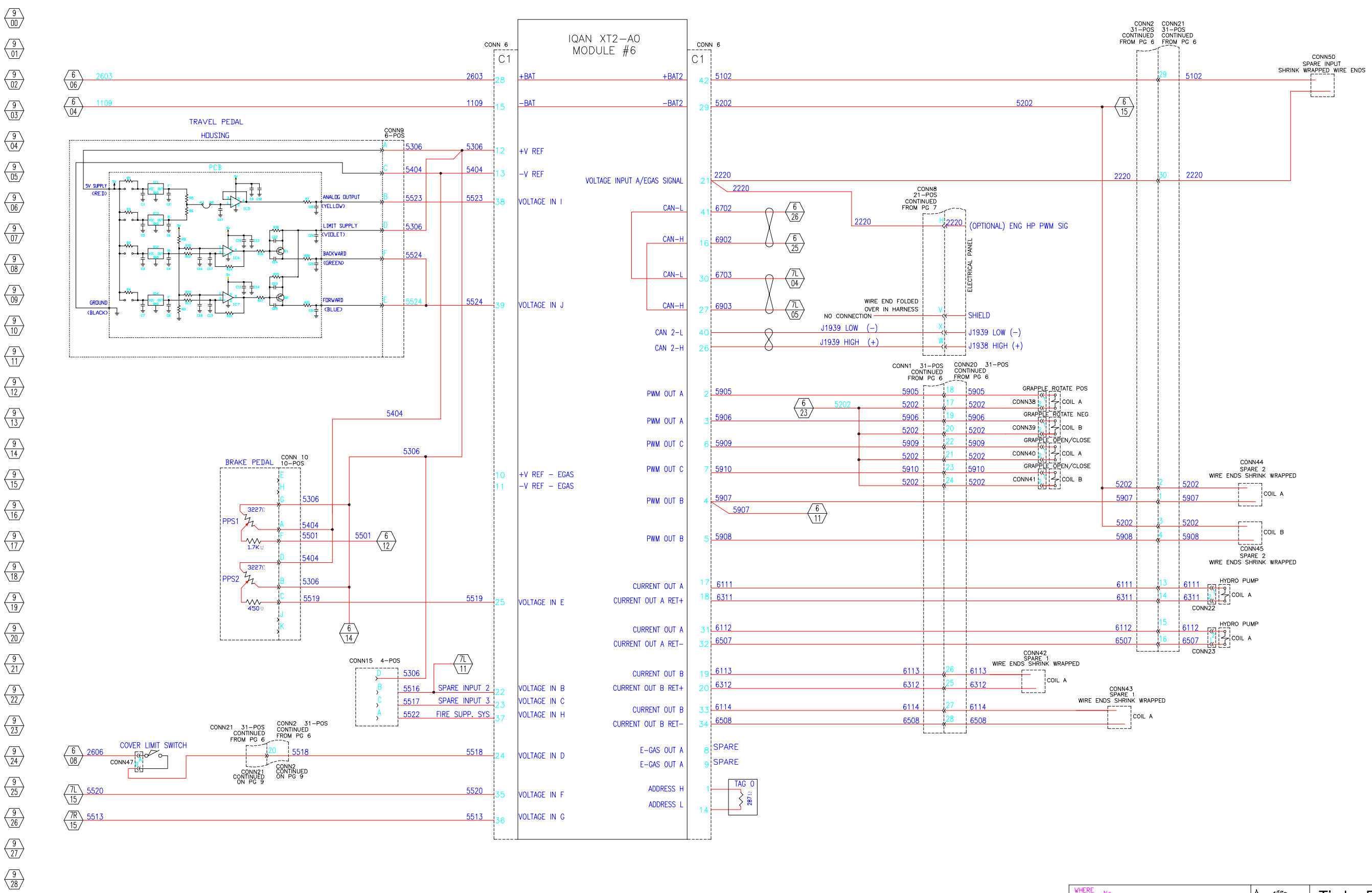

THIS DRAWING IS THE PROPERTY OF TIMBERPRO, LLC ANY REPRODUCTION OF THIS DRAWING, IN FULL OR IN PART, OR DISCLOSURE OF ITS CONTENTS WITHOUT WRITTEN CONSENT FROM TIMBERPRO, LLC IS STRICTLY PROHIBITED.

REV.	DESCRIPTION	BY	DATE

WHERE USED: No.

TOLERANCES (UNLESS OTHERWISE STATED) MACHINING WELDING
1 PLACE DECIMAL ± .030 ± .10
2 PLACE DECIMAL ± .015 ± .05
3 PLACE DECIMAL ± .005

CONCENTRICITY
ROUNDNESS
PARALLELISM
FLATNESS
CYLINDRICITY
POSITION
PERPENDICULARITY
ANGULARITY
RUNOUT
STRAIGHTNESS
REFERENCE
DIAMETER

PARTS MUST BE FREE OF BURRS
BREAK SHARP EDGES

MATERIAL DESCRIPTION

EXPERIMENTAL No:

TimberPro, Inc.
1407 INDUSTRIAL DRIVE
SHAWANO, WISCONSIN 54166

TITLE: ELECTRICAL SCHEMATIC
IQAN XP2 Mod - 830,840,&630

DRAWN BY: JBH
DATE: 01/30/06
SCALE: NONE
SHEET: 9 OF 9
FIN. WT:
D