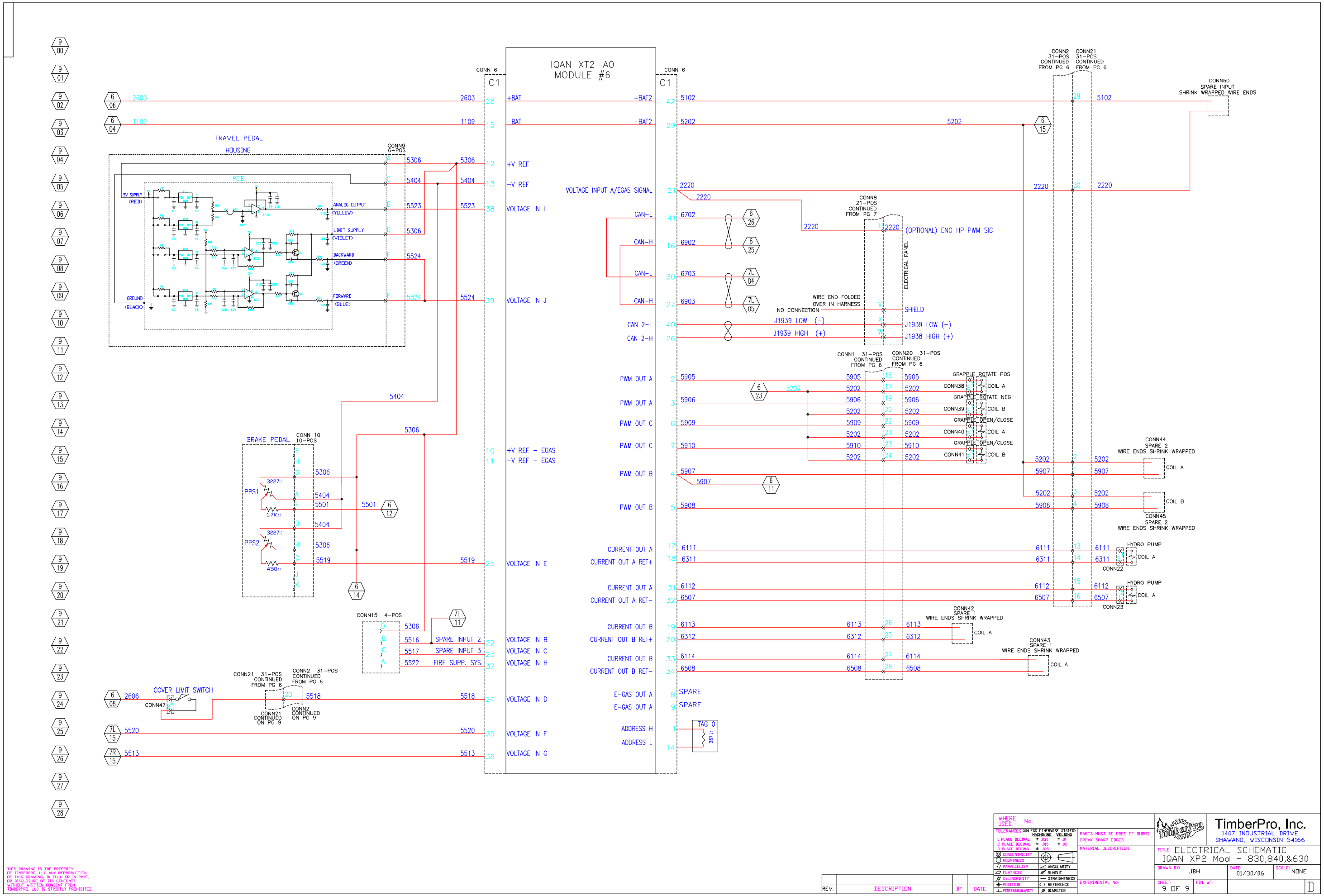

THIS DRAWING IS THE PROPERTY OF TIMBERPRO, LLC ANY REPRODUCTION OF THIS DRAWING, IN FULL OR IN PART, OR DISCLOSURE OF ITS CONTENTS WITHOUT WRITTEN CONSENT FROM TIMBERPRO, LLC IS STRICTLY PROHIBITED.

REV.	DESCRIPTION	BY	DATE

WHERE USED: No.

TOLERANCES (UNLESS OTHERWISE STATED) MACHINING WELDING
1 PLACE DECIMAL ± .030 ± .10
2 PLACE DECIMAL ± .015 ± .05
3 PLACE DECIMAL ± .005
CONCENTRICITY
ROUNDNESS
// PARALLELISM
ANGULARITY
FLATNESS
RUNOUT
CYLINDRICITY
STRAIGHTNESS
POSITION
( ) REFERENCE
PERPENDICULARITY
Ø DIAMETER

PARTS MUST BE FREE OF BURRS
BREAK SHARP EDGES
MATERIAL DESCRIPTION
EXPERIMENTAL No:

TimberPro, Inc.
1407 INDUSTRIAL DRIVE
SHAWANO, WISCONSIN 54166

TITLE: ELECTRICAL SCHEMATIC
IQAN XP2 Mod - 830,840,&630

DRAWN BY: JBH
DATE: 01/30/06
SCALE: NONE
SHEET: 9 OF 9
FIN. WT:
D